Requirements for Connection of New Facilities or Changes to Existing Facilities Connected to the AEP Transmission System

Effective Date: 11/01/2026

Supersedes: AEP Interconnection Requirements Revision 7

Description: Requirements for interconnection to the AEP Transmission System

Revision History

Rev.	Description of Changes **Note:** This table contains the Revision History for the current year and two previous years. Additional Revision History is available in previously published versions.	Date
6	Annual review: Section 1.0 (Document Overview) • Included FAC-001 R1 and R3 requirements. • Added Behind-The-Meter Generation (BTMG) to purpose. • Updated number of Transmission Companies from eight to seven. Section 2.0 (Initial Engagement) • Added references to specific FAC-001-R3. • Added table to show how coordinated studies are defined for new/materially modified changes (2.2). • Removed Electromagnetic Transient (EMT) modeling information (2.3.1.2). • Added information regarding sharing of the results of the studies with affected Transmission Owners and tariff requirements by RTE (2.3.2). • Added AEP Required Internet postings (2.5). Section 3.0 (Planning) • Updated Figure 5: Load Connection (3.1). • Added language to reflect large load requests (>75 100MW) that require a completed Project Intake Form (3.1). • Added language to reflect customer configurations that have potential to create a through-path that may subject the Customer to additional requirements (3.1). • Added clarifying language for hard tapped lines (3.2). • Added new section 3.5 for RTO specific FAC-001-R3 sharing results of studies information. • Added references to Transmission Planning Reliability Criteria – Transource Missouri, LLC, Transmission Planning Reliability Criteria – Transource Missouri, LLC Attachment Evergy, and Transmission Planning Reliability Criteria – Pioneer Transmission, LLC (3.3). Section 4.0 (Design) • Added language stating the Requester will execute any necessary documentation to grant AEP access to the interconnect facility (4.1.1). • Added section 4.3.5.2 Shunt Devices. • Added metering information for ERCOT EPS and IPP metering requirements for AEP (4.6.3). • Added metering requirement questions for a single Generator or Multiple Generators cogenerating behind a single POI (4.6.3). • Updated backup communications language to require a satellite phone for certain generators (4.7.4). • Added new section 4.7.5 Polled Device Connectivity Requirements. Section 6.0 Operations • Updated terminology to reflect organizational changes.	12/31/2024

	• Renamed section 6.13.2 Point of Measurement (previously Point of Compliance). • Removed Point of Compliance information and replaced with Point of Measurement (6.13.2). • Renamed section 6.13.3 Voltage Fluctuation Criteria (previously Voltage Flicker Criteria) • Added sections 6.13.3.1 Flicker and 6.13.3.2 Rapid Voltage Changes (RVC) Appendix A: Added definitions for Affiliate, Affiliate Operating Companies, Balancing Authority, Behind-the-Meter Generation, Non-Affiliate, Retail Customer, Through-path, Transmission Companies, and Wholesale Customer to Glossary. Updated definition for Independent Power Producer. Appendix B: • Appendix B.1: Added Behind-the-Meter Generation to description; added Modeling for Short-Circuit Studies. • Appendix B.2: Added qualified change to description; updated industrial load type table; included reference to NERC Data Center Information Collection Questionnaire. • Appendix B.3: Added qualified change to description. Document Control: Updated reviewers and approvers.	
7	Annual review: General updates to improve readability. Figure 1: Updated to reflect sub-transmission generation connections. Table 1: Updated to add group email addresses for IPP Study team. Expanded the table to include MISO. Table 2: Expanded to include MISO. Corrected FAC reference. Section 2.5: Added Transmission Planning Reliability Criteria for AEP MISO. Removed Pioneer due to its consolidation with AEP PJM Planning Reliability Criteria. Section 3.1: Updated all connection diagrams. Consolidated redundant diagrams. Added Connection Diagram D and reordered generation connection diagrams. Section 3.5.4: Added new section for Sharing Results of Studies in MISO. Section 4.4.1.4: Added new section for Protection Modifications to Existing AEP-Owned Transmission Lines. Section 4.6.3: Added guidance for Generation Connections regarding aux load service requests. Section 4.6.4: Removed Metering Equipment Maintenance & Testing information. Section 4.6.4.1: Consolidated guidance for PJM and SPP. Removed duplicative information. Section 4.6.10: Relocated Metering Equipment Maintenance & Testing from Section 4.6.4 and added final bullet regarding access to customer facility, if metering is located in the customer facility. Section 6.4: Added clarity for scenarios in which there are multiple generators behind the same point of interconnection.	12/31/2025

	Section 6.13.1 and 6.13.2: Revised to include full rewrites. Section 6.14.4.0: Added a new requirement for Large Load Customers' Voltage Ride-through capability.	
8	Annual Review Overall: Updated language to improve readability Overall: Replaced footnotes with links and notes in the document for ease of use and readability. **Section 2.0 (Design)** 2.3.1.1: • Added Model quality test reports and accuracy attestation as a requirement before a generation facility is in operation. • Removed language regarding abiding to the RTE ride-through requirements. **Section 3.0 (Planning)** 3.1: • Replaced Figure 7: Generation Connection to an Existing Transmission Line. • Updated language regarding customer configured equipment. 3.3: • Removed reference to Transource Missouri documents • Reworded the language regarding Requester's equipment compliance. 3.4.3: Reworded language. 3.7: Added this new section discussing large Load Cluster Studies. **Section 4.0 (Design)** 4.6.3: Added a question regarding the customer requesting a net metering arrangement to the DER/Behind-the-Meter Generation Requester (End-User Customers) sub-bullet. 4.6.7.1: removed language regarding the customer requesting a check meter in the revenue metering circuit. **Section 5.0 (Construction)** 5.2.1: Updated to add language regarding final cut-in outage contingencies. **Section 6.0 (Operations)** 6.10: Updated language to reflect emergency conditions for generator underfrequency protection. 6.11: Removed language regarding requiring an automatic load shedding scheme. 6.12: Updated language regarding the large load serving a municipal or cooperative utility. 6.14.2: Added language regarding grid forming capability. 6.14.3: • Renamed to Sub-Synchronous Oscillations • Reworded the language for a more robust security definition. 6.14.4: • Renamed to Large Load Rapid Power Variation and Forced Oscillations • Reworded language to include references to AI processes and their potential damage to the grid. **Appendix B:** • Appendix B2: Added information regarding Data Centers	11/01/2026

Table of Contents

Revision History 2

Table of Contents 5

Table of Figures 6

Table of Tables 7

1.0 Document Overview 8

2.0 Initial Engagement 9

2.1 Procedures for Requesting New or Materially Modified Interconnections 9

2.2 Procedures for Coordinated Studies of New or Materially Modified/Qualified Change Interconnections (FAC-001-4 R3.1) 10

2.3 Information Requirements and Sharing of Results 12

2.4 Coordination with Other Codes, Standards, and Agencies 15

2.5 Use of Information 15

3.0 Planning 16

3.1 Connection Types and Diagrams 16

3.2 Transmission Switching Guidelines 22

3.3 General Design Information 23

3.4 Generation Configurations 25

3.5 Sharing Results of Studies 25

3.6 Siting, Right-of-Way, and Environmental Requirements 27

3.7 Large Load Cluster Studies 29

4.0 Design 29

4.1 Transmission Station Design Requirements 29

4.2 Substation Structures 31

4.3 Equipment 31

4.4 Protection Systems 34

4.5 Supervisory Control and Data Acquisition (SCADA) Requirements 39

4.6 Metering Requirements 43

4.7 Telecommunications Facilities Requirements 57

4.8 Station Service 60

4.9 Transmission Line Requirements 61

5.0 Construction 68

5.1 Option to Build Oversight Requirements 68

5.2 Inspection Requirements 68
6.0 Operations 69
6.1 General Operating Requirements 69
6.2 Advanced In-Service Coordination 70
6.3 Transmission Service and NERC Registration 70
6.4 Meter Agent and Transmission Load Management (Settlements) Requirements 70
6.5 Station Load and Ancillary Service Provider 71
6.6 Synchronizing Facilities 72
6.7 Asynchronous Network Interconnections 72
6.8 Voltage, Reactive Power, and Power Factor Correction 72
6.9 Dynamic Megavolt Ampere Reactive (MVAR) Requirements 73
6.10 Frequency Requirements 73
6.11 Abnormal Frequency Operation 74
6.12 Underfrequency Load Shedding 74
6.13 Power Quality Impacts 74
6.14 Operational Issues 76
6.15 Communications and Procedures During Normal and Emergency Operating Conditions 78
7.0 Maintenance 79
7.1 Ownership, Cost, Maintenance, and Compliance 79
7.2 Maintenance Coordination 79
8.0 Appendix A: Definitions and Acronyms 80
9.0 Appendix B: Requester Information Requirements 87
Distributed Energy Resources (DERs)/Behind-The-Meter Generation/Generation Connections (GC) 88
Distributed Energy Resources (DERs)/Behind-The-Meter Generation/Generation Connections (GC) Generator Request Form 89
New or Material Modification/Qualified Change Request Form (as defined in Section 2.1. & 2.2) 99

Table of Figures

Figure 1: Requester Connection Decision Type Tree 9
Figure 2: Legend 16
Figure 3: End-User Connection Types A, B, and C 17
Figure 4: End-User Connection Types D, E, and F 17

Figure 5: Large Load Connection *See note following the one-line diagrams. 18
Figure 6: Generation Connection to an Existing Station Bus 19
Figure 7: Generation Connection to an Existing Transmission Line 20
Figure 8: Generation Double Connection to an Existing Transmission Line(s) 21
Figure 9: A Single Generator Connected to a Single POI 46
Figure 10: A Single Generator Connected to a Single POI with an Additional Meter M2 Installed inside the Developer's Facility to Capture the AUX Load 47
Figure 11: Multiple Generators with One or Multiple Owner(s) Co-Generating Behind a Single POI 48
Figure 12: Multiple Generators with One or Multiple Owner(s) Co-Generating Behind a Single POI 49
Figure 13: Multiple Generators with One or Multiple Owner(s) Co-Generating Behind a Single POI where One of the IPP's AUX Load Is Served by a Non-AEP LSE 50
Figure 14: CT Polarity and VT Connection 54
Figure 15: AEP Loading Map for Heavy Ice Load 64

Table of Tables

Table 1: First Point of Contact for Requesting New or Materially Modified Interconnections 10
Table 2: Procedures for Coordinated Studies of New or Material Modified/Qualified Change Interconnections 11
Table 3: Information to be Included in Studies 14
Table 4: HSR Coordination Times 32
Table 5: Transmission Line Measurements 40
Table 6: Generator Collector Transformer Measurements 40
Table 7: Generation Measurements 40
Table 8: Non-Auxiliary Load Collocated with a Generation Facility 40
Table 9: Generator Shunt Devices/Reactive Quantities 40
Table 10: Resource Availability for Injection for Real or Reactive Power (Applies to Wind, Solar, and Storage) 41
Table 11: Transmission Line Status 41
Table 12: Generation Facility Status 41
Table 13: Generator Reactive Device Status 41
Table 14: Requirements for All Lines Connected to the AEP Transmission System 61
Table 15: Additional Requirements for Lines Connecting to the AEP Transmission System 64
Table 16: AEP Standard Conductor Table 65

Table 17: OPGW Design and Fiber Requirements 66

1.0 Document Overview

This document describes the processes and technical requirements for new or materially modified facility connections to the American Electric Power (AEP) transmission system's electrical transmission network in accordance with North American Electric Reliability Corporation (NERC) Standard FAC-001 requirements.

AEP is responsible for evaluating its transmission network capabilities and formulating plans that maximize functionality and operation in a safe, reliable, cost effective, and environmentally responsible manner. AEP Transmission created the requirements in this document to ensure the transmission system's integrity when providing new or materially modified/qualified change facility connections. All future Requester facilities, loads, major equipment, or setting changes must be submitted to AEP for review before they are placed in service. The Requester is responsible for obtaining the requirements from the applicable Regional Transmission Entities (RTEs) within which their operation exists.

This document contains the minimum requirements acceptable for Affiliated and Non-Affiliated connections to the AEP Transmission System. The requirements and processes described in this document will guide the planning for new facility installations and upgrading existing facilities. In some specific cases, AEP may request additional details.

For purposes of this requirements document, AEP Transmission interconnections are organized into four categories:

- Distributed Energy Resource (DER) or Behind-The-Meter Generation (BTMG)
- End-User Connection (EUC)
- Generator Connection (GC)
- Transmission Interconnection (TI)

Each subsection contains the general requirements that apply to all interconnection categories and indicates any requirements that may be specific to a single category. Refer to section 2.0 for more information.

AEP has nine electric utilities referred to as Affiliate Operating Companies and seven electric utilities, referred to as Transmission Companies, which are geographically dispersed across eleven states. RTEs support and assist with the operation and usage of the larger integrated (or interconnected) regional transmission system and are generally responsible for ensuring the regional transmission system's safe and reliable operation. Nothing within this document is intended to conflict with applicable RTE requirements.

Entities requesting a Transmission Interconnection (TI) are required to register with a Balancing Authority (BA) with their respective RTE. The interconnecting facilities will not be energized until AEP verifies that this registration is complete.

2.0 Initial Engagement

This section explains the first steps the Requester should take when initiating a modification or new connection to the transmission infrastructure. Refer to Figure 1 to assist in the understanding of this section and the references to each respective connection type throughout this document.

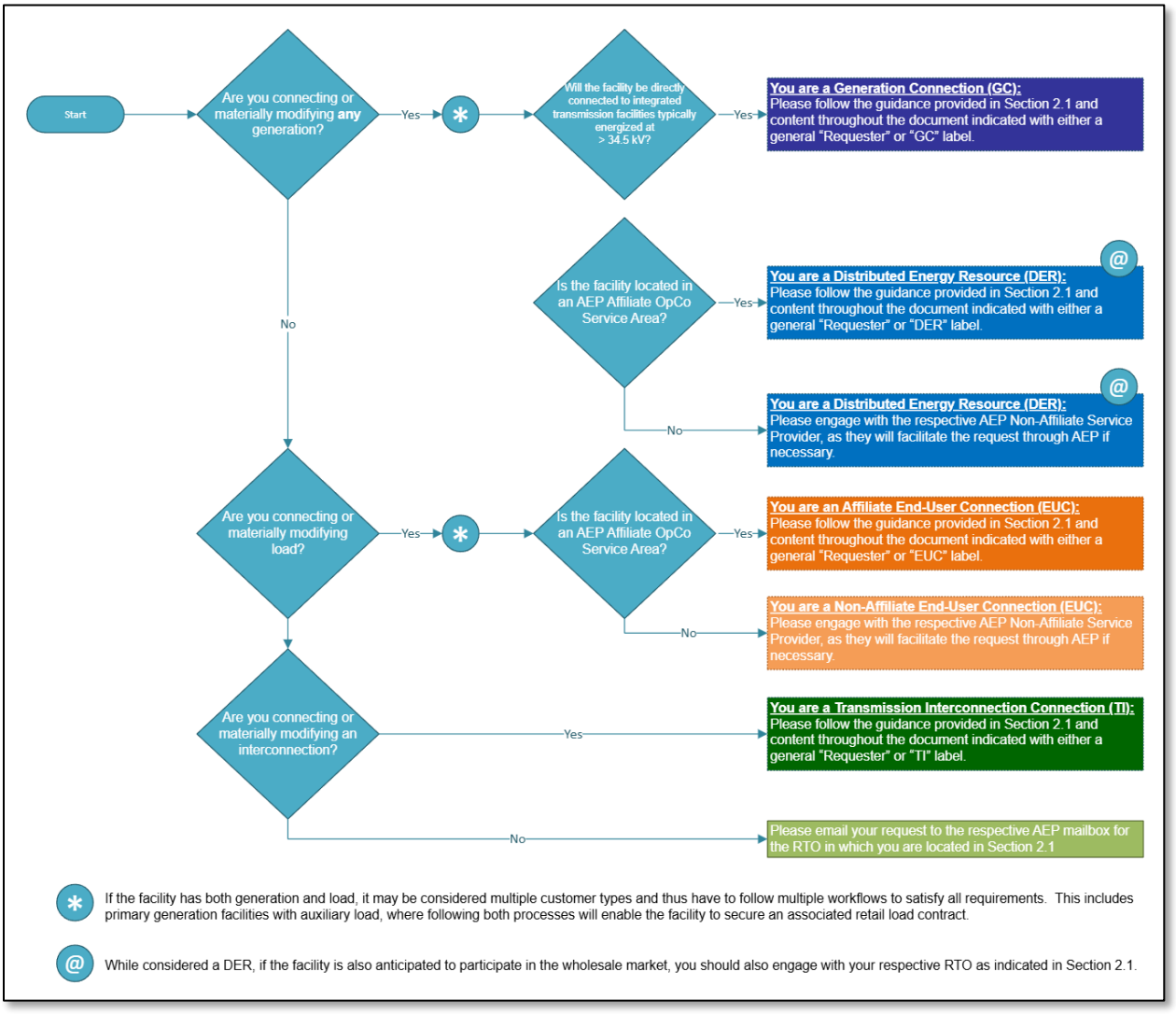

Figure 1: Requester Connection Decision Type Tree

2.1 Procedures for Requesting New or Materially Modified Interconnections

This section outlines the first point of contact for requesting new or material modifications/qualifying changes to existing connections. Refer to Figure 1 to determine connection type and requirements. The definitions of each region and connection type are in Appendix A: Definitions and Acronyms. In addition, the processes, data requirements, and procedures for sharing results for these particular requests are located in sections 2.2, 2.3.1, and 2.3.2. For DER and BTMG installations, refer to the *DER Technical Interconnection and Interoperability Requirements (TIIR) for the AEP System* document.

Table 1: First Point of Contact for Requesting New or Materially Modified Interconnections

Region	State	Connection Type			
		DER	**GC**	**EUC**	**TI**
ERCOT (Electric Reliability Council of Texas)	Mid/South Texas	AEP Texas	≤10 MW: System Interconnection Services (SIS) ERCOT Mailbox >10 MW: ERCOT Website	SIS ERCOT Mailbox	SIS ERCOT Mailbox
SPP (Southwest Power Pool)	North Texas Arkansas Louisiana	AEP SWEPCO	SPP Website	SIS SPP Mailbox and SPP AQ Mailbox	SIS SPP Mailbox
	Oklahoma	AEP PSO			
PJM (Pennsylvania-New Jersey-Maryland) Interconnection)	Indiana Michigan	AEP I&M	PJM Website Mailbox	SIS PJM Mailbox	SIS PJM Mailbox
	Kentucky	AEP KPCo			
	Ohio	AEP Ohio			
	West Virginia Tennessee Virginia	AEP APCo			
MISO	Indiana	Follow the MISO tariff	Follow the MISO tariff	For 2026, SIS PJM Mailbox	For 2026, SIS PJM Mailbox

2.2 Procedures for Coordinated Studies of New or Materially Modified/Qualified Change Interconnections (FAC-001-4 R3.1)

This section outlines the procedures for coordinated studies of new or materially modified/qualifying change interconnections that are summarized in Table 2.

Table 2: Procedures for Coordinated Studies of New or Material Modified/Qualified Change Interconnections

Region	DER	GC	EUC	TI
ERCOT	The procedures for initiating DER studies are located in section 2.1. See DER Technical Interconnection and Interoperability Requirements (TIIR). The respective state and/or OpCo manage a screening process to determine the required level of study. Should a customer wish to install or modify a DER while taking transmission service through an OpCo, appropriate Protection and Control (P&C) devices may need installed to keep the DER designation. See section 2.3. Also, as transmission RTO requirements change, existing DER equipment, owned by the OpCo's customer, may require updates to continue operation behind the meter or otherwise.	The procedures for coordinated interconnections within the ERCOT region can be found on the ERCOT website. Small generator interconnections (10 MW or less) within the ERCOT region generally follow the DER process within that region. Please follow the procedures as indicated in the DER column.	Affiliate EUC studies are managed by the respective AEP OpCo. New Requesters should contact AEP Economic & Business Development (EBD),while existing Requesters should contact their respective OpCo representative. All EUC requests at 69 kV and above shall utilize the process as defined in section 2.1 and include all pertinent information as directed in section 2.3.1.2. Non-Affiliate EUC studies are outlined in each Requester's agreement with AEP on file at the FERC's eTariff website. Communicate using the mailbox region in section 2.1 for details.	Given the unique nature of TI, procedures for coordinated TI studies are managed on a case-by-case basis. The details are outlined in the respective Interconnection Agreements (IA) with AEP and the respective RTO proforma documents.
SPP		The procedures for studies within the SPP region can be found in Attachment V of the SPP Open Access Transmission Tariff (OATT), which is located on the SPP Governance website.		
PJM		The procedures for studies within the PJM region can be found in the PJM Manual 14 Series on the PJM website.		
MISO	N/A	The procedures for studies within the MISO region can be found in the MISO BPM-015 manual.		

Coordinated studies as required by FAC-002 are defined in the following manner when new/ materially modified, also referred to as qualified changes, are made (refer to Appendix A: Definitions and Acronyms):

	PJM	SPP	ERCOT	MISO
Qualified Change as defined by RTO	Located in Attachment G.12 (1-3) of M-14B. m14b.ashx (pjm.com)	Defined in Section 5.2 of SPP Planning Criteria Search - Southwest Power Pool (spp.org)	Defined in listed FAC-002 document. Compliance in ERCOT	Defined on Page 70 of BPM20 MISO Business Practice Manuals
Coordinated Studies	The following are utilized to complete FAC-002 coordinated studies: Steady State Analysis, Short Circuit Study, Dynamic and Transient Stability Analysis, and Facility Studies. Complex projects could require additional studies per AEP/RTO discretion.			

2.3 Information Requirements and Sharing of Results

2.3.1 Data Required to Properly Study the Connection

The following subsections outline or direct Requesters to the information required in order for AEP to properly study the request. After the study is complete, AEP follows the steps outlined in each RTE to confirm the study results as reflected in section 2.3.2.

2.3.1.0 Distributed Energy Resources and Behind-The-Meter-Generation

The Affiliate (for example: AEP Operating Companies [OPCo]) or the Non-Affiliate entities manage their respective data requirements for coordinated Distributed Energy Resource (DER) and Behind-The-Meter Generation (BTMG) studies on the distribution system. These requirements are located on their OPCo or Non-Affiliate respective websites. Requesters should engage with the respective Non-Affiliate entity directly for its respective distribution requirements. If it is determined that the request may have an impact to transmission or sub-transmission, including backfeed for short periods of time, or including impacts to the Bulk Electric System (BES), or that the system is tied to a transmission point of interconnect, even if the voltage appears at the sub-transmission/distribution system, a study for potential impact and additional data or facility additions may be required by AEP Transmission or by other affected Transmission Owners.

2.3.1.1 Generation Connections

Generation Connection (GC) study data requirements are outlined by the applicable RTE whose market the generator is participating in. For those GC that do not plan to participate in a power market or that will be operating behind-the-meter, Appendix B: Requester Information Requirements (B.1 DER Information Requirements Form) shall be completed and returned to the designated AEP mailbox. Different requirements may be required if the GC wishes to install or modify a DER or modify and operate a BTMG unit, not participating in the market or operating behind-the-meter while taking transmission service through either state distribution facility or through transmission facility. In accordance with reliability requirements, both federal

and state appropriate P&C devices may need installed to energize the DER/BTMG equipment. Refer to section 4.4.1.3 for further information.

In all RTE regions, additional or updated data (beyond RTE requirements), is also required once the facility has been declared ready for operation, including:

- Transmission line length, rating, positive and zero-sequence impedances based on final transmission line design.
- Final collector station relay one-line diagram.
- Final collector station relay (excluding inter-connect transmission line relays) settings, such that both parties must agree that coordination has been achieved before energization. Redundant high-speed protection schemes for generation facilities may be required to achieve coordination with Transmission protection schemes.

Note: If the Requester's line relays differ from relays that AEP approved previously, backfeed will be delayed until the relays that AEP had approved are obtained and made available for the Requester's line terminal. Changes to settings and coordination of new settings will result in schedule delays and additional costs to the Requester.

The Requester must supply the following materials to AEP before a generation facility is in operation:

- All final electrical one-line diagrams
- Equipment data
- Schematic diagrams
- Modeling data (including dynamic data)
- Model quality test reports and accuracy attestation

Subsequent revisions affecting the generation must be documented with copies of the revised electrical one line, schematic diagrams, and modeling.

Dynamic modeling data that must be submitted includes modeling for both positive sequence simulations (PSSE format) and electromagnetic transient simulations (PSCAD format). Electromagnetic Transient (EMT) modeling (PSCAD format) is currently required in the ERCOT region and requested by AEP for all other RTE regions. Please ensure this modeling is available and submitted to the applicable RTE along with all other information required or requested by the RTE. In the ERCOT region specifically, Requesters (also labeled by ERCOT as Interconnecting Entities) must submit accurate dynamic PSSE and PSCAD models which pass ERCOT's Voltage Ride-Through test. This must be submitted at least 150 business days before the Quarterly Stability Assessment (QSA) date to be included in that QSA. Any revisions to EMT modeling should be provided as soon as they are available. Refer to Appendix B: Requester Information Requirements for more information.

If it is planned that the generator will have active anti-islanding protection during commercial operation, the Requester must provide technical documentation describing the protection system that will be used and how it will function. See protection and control requirement details later in this document.

Any change in ownership must be communicated promptly to AEP and the RTEs as applicable.

2.3.1.2 End-User Connections

End-User Connection (EUC) study data requirements are outlined in Appendix B: Requester Information Requirements (B.2 EUC Information Requirements Form) and upon completion should be communicated to the identified party within the form.

2.3.1.3 Transmission Interconnections

Transmission Interconnection (TI) study data requirements are specific to each request. A form for initiating communication with AEP is provided in Appendix B: Requester Information Requirements (B.3 TI Information Requirements Form), and the respective System Interconnection Services (SIS) representative identified in section 2.1 will communicate any additional data requirements following AEP's detailed review of the request.

2.3.2 Procedures for Sharing Results of Studies and Data to be Included (FAC-001-4 R3 2-3)

At the completion of the respective study, AEP will share the results with the requesting party via the group or representative indicated and include the data illustrated in the following table. For sharing of the results of the studies with affected Transmission Owners, AEP follows the posted tariff requirements by RTE. These details are described in section 3.5 by interconnection type: Transmission Owner, End-User, and Generation interconnection type. The timing and data are shared through RTE procedures or directly depending on interconnection type.

Table 3: Information to be Included in Studies

Data Included in Study	DER	GC			EUC		TI
		Feasibility	Impact	Facilities	Affiliate	Non-Affiliate	
Scope of Study	✓	✓	✓	✓	✓	✓	✓
Assumptions	✓	✓	✓	✓	✓	✓	✓
Local & Network Impacts	✓	✓	✓	✓	✓	✓	✓
Stability Analysis				✓	✓	✓	
Conceptual Scope of Work	✓	✓	✓		✓	✓	✓
Functional Scope of Work				✓			
Anticipated Costs	✓	✓	✓	✓	✓	✓	✓
Anticipated Schedule	✓	✓	✓	✓	✓	✓	✓
Appendices with Applicable Drawings, Diagrams, and Maps	✓	✓	✓	✓	✓	✓	✓
Notes:							

Data Included in Study	DER	GC			EUC		TI
		Feasibility	Impact	Facilities	Affiliate	Non-Affiliate	
• For requests in the SPP region, SPP communicates Feasibility and Impact Study information, but requests Facilities Study information from AEP, which SPP communicates to the Requester. For requests in PJM, the Phase 1, Phase 2, and Phase 3 approaches are now used effective July 2023. For requests in ERCOT, the information is populated into their Resource Integration and Ongoing Operations system for the applicable study type. • To clarify for GC, stability analysis typically is only conducted by AEP in the ERCOT region. In the SPP and PJM regions, the GC stability analysis is performed by SPP or PJM respectively, while AEP typically acts as a reviewer/commenter. To clarify for EUC, stability analysis is currently required to be conducted by AEP in the ERCOT region only, and just for those EUC that ERCOT classifies as a Large Load. Outside of these clarifications, AEP reserves the right to perform a stability analysis for any of the studies listed.							

2.4 Coordination with Other Codes, Standards, and Agencies

The information contained in this document is supplemental to and does not intentionally conflict with or supersede the National Electrical Code (NEC), National Electrical Safety Code (NESC), Institute of Electrical and Electronics Engineers (IEEE) *Std 1547™-2018, IEEE Std 2800™-2022, IEEE Std 519™-2022, IEEE Std 1453™-2022,* or such federal, state, and municipal laws, ordinances, rules, regulations; NERC reliability standards; or RTO tariffs.

It is the Requester's responsibility to conform to all applicable and current requirements. Except as otherwise provided in interconnection agreements or otherwise, the Requester's responsibility begins at the Point of Interconnection (POI) as determined by the use of the Connection Type as outlined in Table 1 and described in the established agreement.

2.5 Use of Information

The information contained in this document applies solely to new or materially modified/qualified change connections to the AEP electrical transmission network. AEP makes no representation or warranty concerning the suitability of the information contained in this document for any other use. Reliance upon the information in this document shall not relieve the Requester from responsibility for the protection and safety of the general public within the Requester's facilities as defined in the executed agreement. This document cross references other AEP postings and guideline documents also posted on AEP.com including, but not limited to:

- Standards and Expectations for Siting, Real Estate, Right-of-Way, and Environmental Permitting for Transmission Interconnection Projects
- Approved Contractors and Major Equipment Vendors
- Independent Power Producers Option to Build Guidelines
- Transmission Planning Reliability Criteria - AEP PJM
- Transmission Planning Reliability Criteria - AEP SPP
- Transmission Planning Reliability Criteria - AEP ERCOT
- Transmission Planning Reliability Criteria - AEP MISO
- Transmission Planning Reliability Criteria - Transource Missouri, LLC
- Transmission Planning Reliability Criteria - Transource Missouri, LLC Attachment Evergy

- AEP Transmission Planning Criteria and Guidelines for End-Of-Life and Other Asset Management Needs
- DER TIIR Requirements (technical interconnection and interoperability requirements)

3.0 Planning

The following subsections outline the requirements associated with the planning phase of a typical project, including standard connection types, in-line switching, design information, configurations of connected generation, siting, Right-of-Way, and environmental requirements.

3.1 Connection Types and Diagrams

The following figures illustrate standard connections to the AEP System for EUC and GC connection types. In addition, the diagrams reference detailed design requirements where applicable. If an EUC chooses to install generation at their facility, whether to participate in the markets or strictly behind the meter load offset, then refer to section 4.4.1.3 for protection requirements.

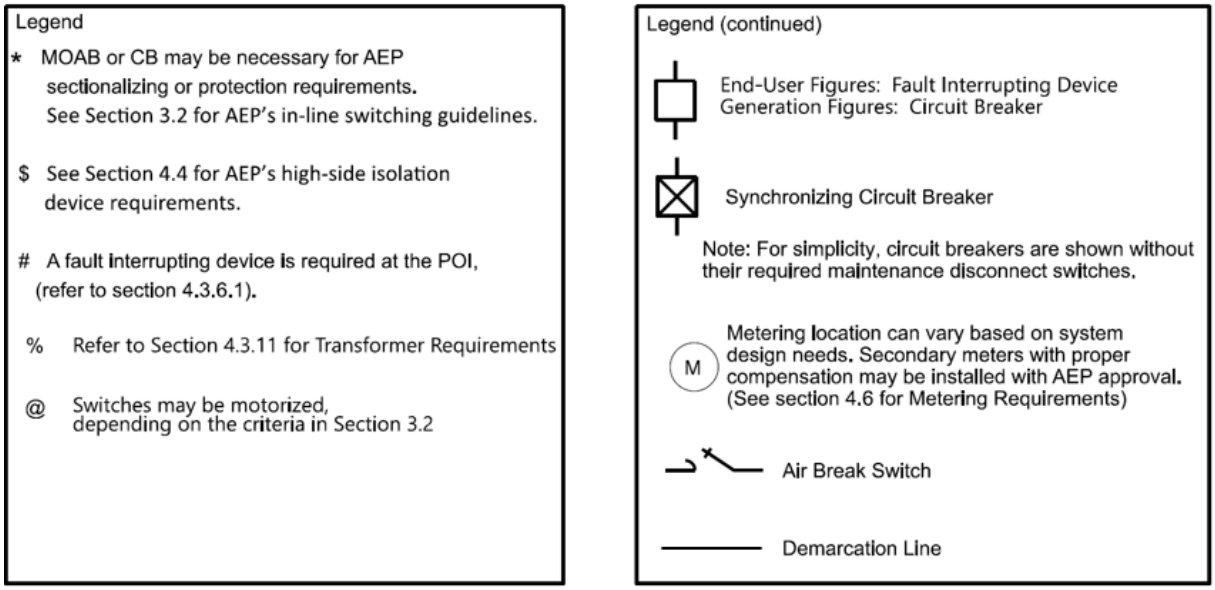

Figure 2: Legend

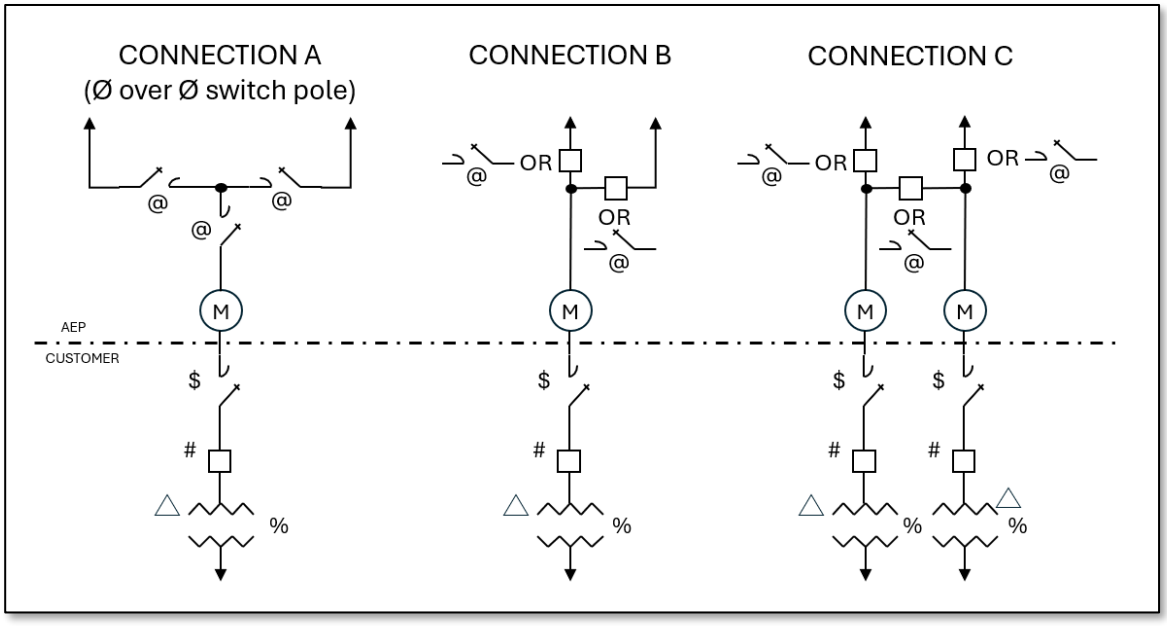

Figure 3: End-User Connection Types A, B, and C

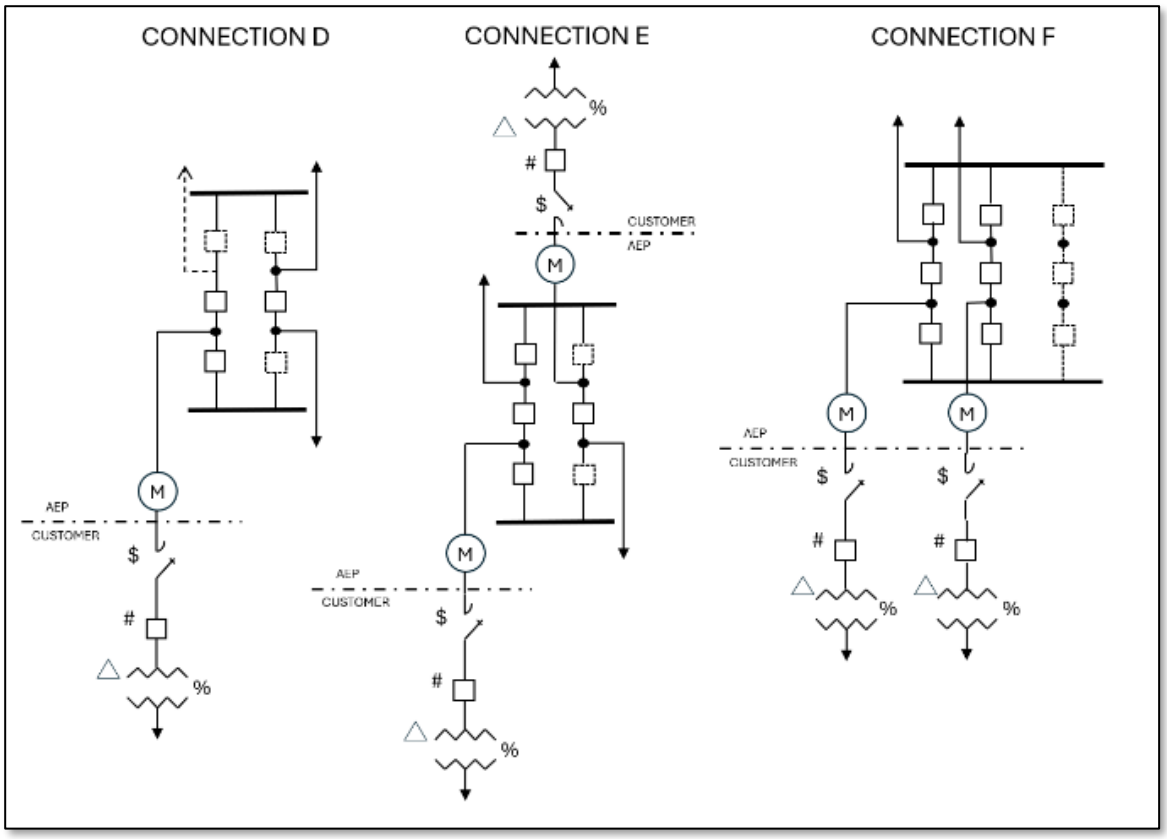

Figure 4: End-User Connection Types D, E, and F

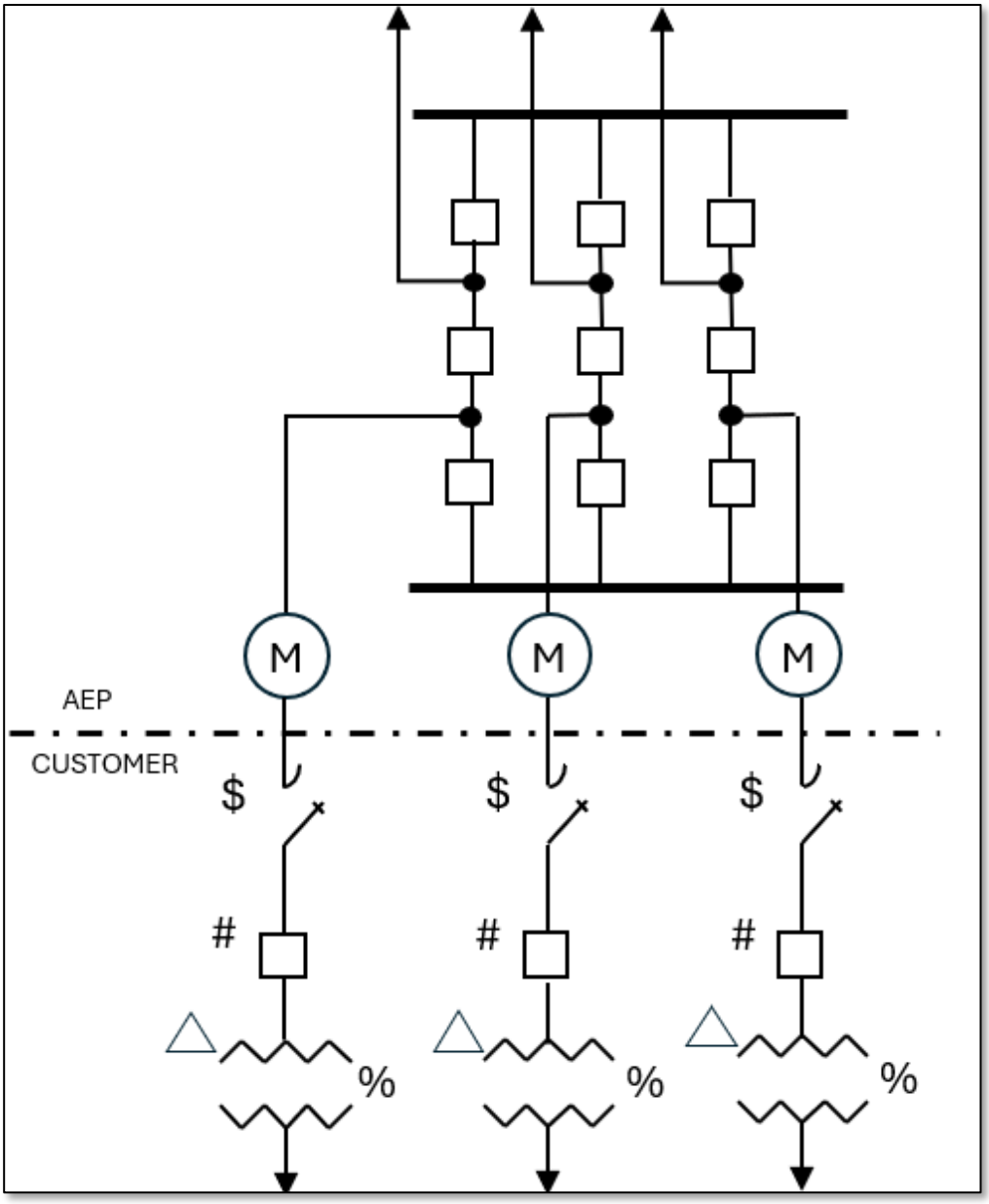

Figure 5: Large Load Connection

***See note following the one-line diagrams.**

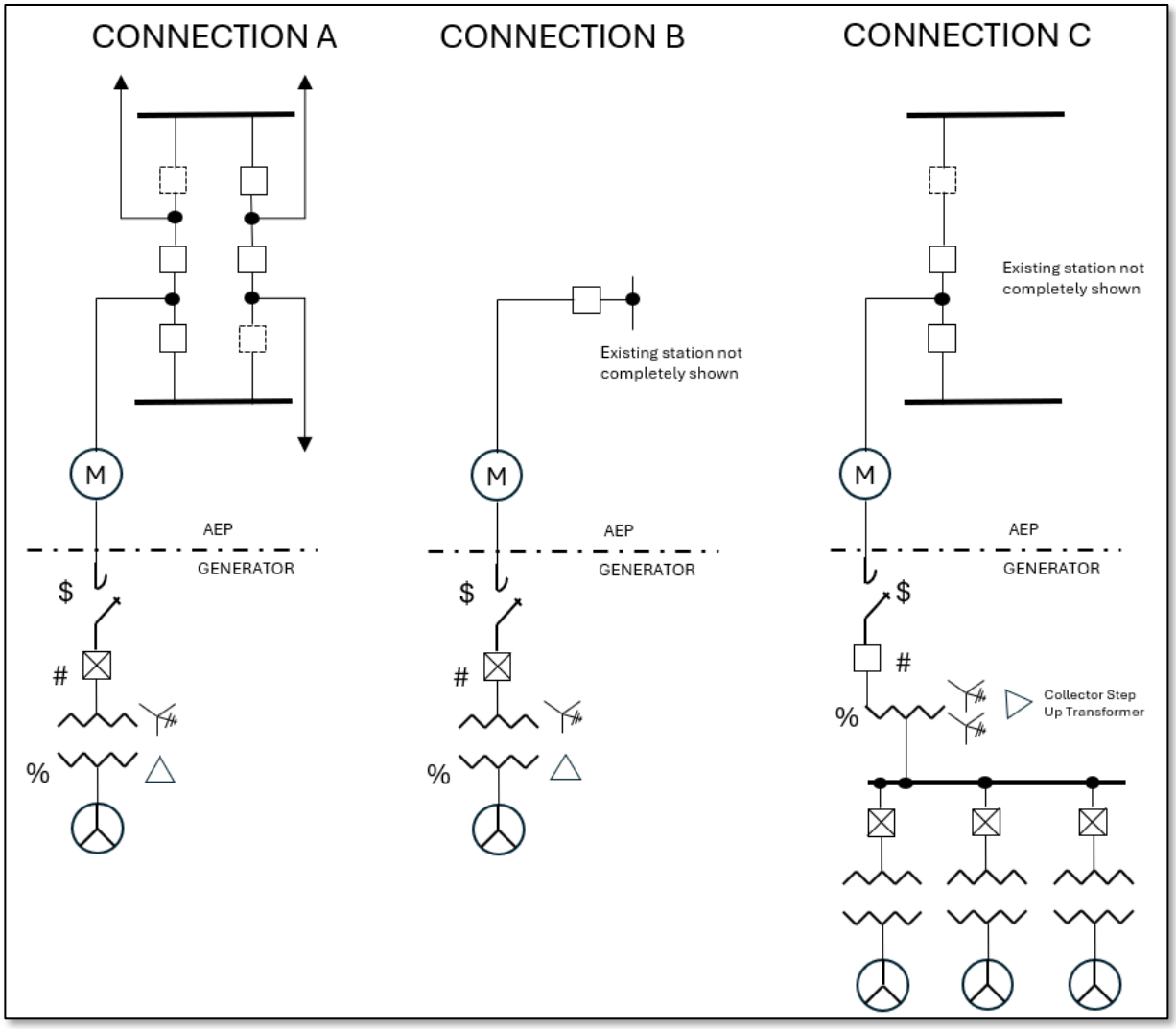

Figure 6: Generation Connection to an Existing Station Bus

Depending on the situation, additional revenue metering at the generator's facility may be required. Refer to section 4.6 for more information.

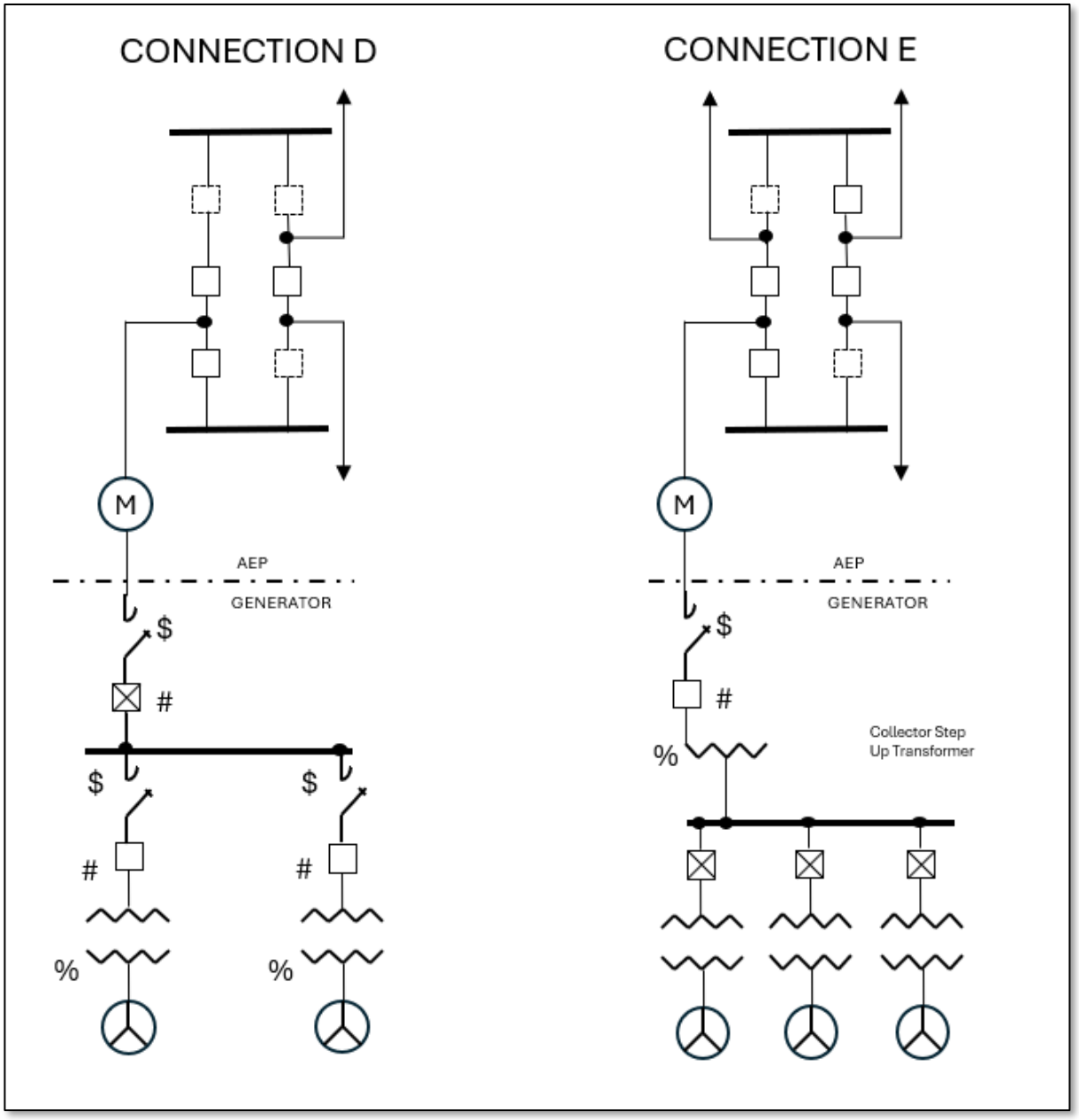

Figure 7: Generation Connection to an Existing Transmission Line

Depending on the situation, additional revenue metering at the generator's facility may be required. Refer to section 4.6 for more information.

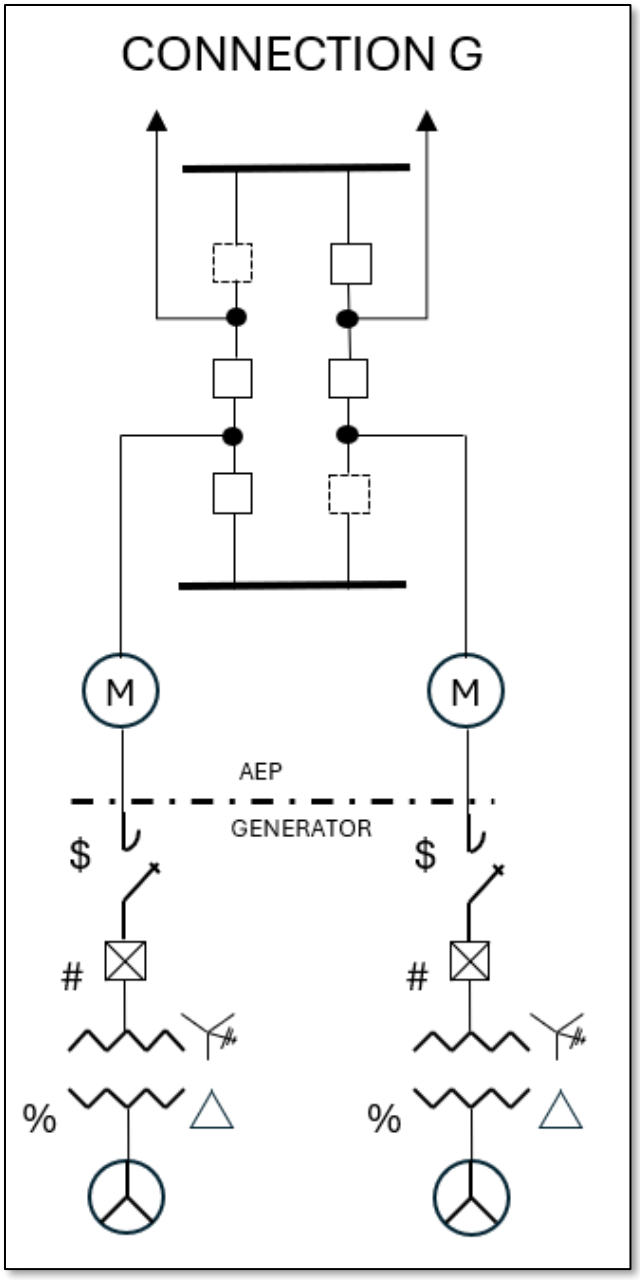

Figure 8: Generation Double Connection to an Existing Transmission Line(s)

Depending on the situation, additional revenue metering at the generator's facility may be required. Refer to section 4.6 for information.

Note: The one-line diagrams depicted throughout this section do not represent every possible customer configuration. These diagrams are meant to depict typical configurations for AEP and the Customer, and it should not be inferred that there will be a separate feed for each Customer transformer. Each RTE may have guidelines or MW limits for each Point of Interconnection (POI).

Large load requests (greater than75 MW) require a completed Project Intake Form to perform a feasibility assessment and conceptual service plan.

AEP does not recommend that customers configure equipment in a manner that establishes a through path on the bulk electric system due to the reliability and compliance implications this creates. Customer configurations that have potential to create a through-path may subject the Customer to additional requirements, including potential NERC registration and adherence to NERC and RTE requirements, and execution of additional agreements. Any configurations that have through-path potential require prior approval by AEP Energy Delivery Operations and/or Transmission Planning.

Note: Any qualified changes to the initial design may result in re-evaluation and additional requirements defined outside of this document. If the Customer makes modifications to the configuration design and it becomes a through-path element, such modifications need to comply with RTE requirements for both designation and sizing.

3.2 Transmission Switching Guidelines

Any connection to AEP will require, at a minimum, motor operated, Supervisory Control and Data Acquisition (SCADA) controlled line disconnect switches, commonly referred to as motor operated air break (MOAB) switches. The only exceptions to this minimum requirement, where switches are not required, are the following situations:

- The connection established to serve load is considered temporary (24 months or less).
- The topography of the tap location is such that the tap is not accessible by road, in which case the in-line switches could be placed elsewhere in a more accessible location.
- The tapped in-line connection is required temporarily under emergency system conditions.
- RTEs might have additional requirements that could prevent the installation of hard taps.

Note: Hard tapped lines may be considered for specific customer situations as a temporary solution with AEP Operating Company approval.

SCADA control and monitoring is required for all in-line sectionalizing unless acceptable justification for manual control exists. Automatic motor operated controls can be added to in-line switches, when justified, to minimize the time required for restoration following a failure of the AEP supply line.

The factors that can be considered when determining whether a load serving substation is radial or looped with MOAB or CB application for in-line switching include, but are not limited to:

- Safety and Health
- SAIDI performance
- Total load magnitude
- Criticality of load and customer/community impact
- Restoration time
- Operational flexibility

- MVA-mile calculations
- Existing system configurations
- FOI calculations for MOABs
- Consideration regarding feasibility of maintenance
- MPOI calculations for CBs
- Area outage statistics

The FOI and MPOI calculations are structured as follows:

Equation 1

$$FOI = L_f \times Miles\ of\ Exposure \times P_f$$

Equation 2

$$MPOI = L_f \times Miles\ of\ Exposure \times \left(P_f + M_f\right)$$

where:

L_f is the peak load (MW) directly jeopardized by the forced outage of the line

Miles of Exposure is the number of line miles between two existing automatic sectionalizing devices (including taps)

P_f is the Permanent Forced Outage Rate (Outages per Year, per Mile)

M_f is the Momentary Forced Outage Rate (Outages per Year, per Mile)

AEP manages the specific minimum thresholds of which FOI or MPOI calculations support the installation of auto-sectionalizing MOAB switches or circuit breakers, respectively. AEP also manages the specific minimum thresholds for determining the requirements on when to loop a radially fed load serving substation.

Circuit breakers are required to connect to the AEP system at or above 200 kV.

For more information on isolation and fault interrupting devices, please reference section 4.3.1 and section 4.3.2.

3.3 General Design Information

Nominal transmission voltages on the AEP system are 765 kV, 500 kV, 345 kV, 230 kV, 161 kV, 138 kV, 115 kV, 69 kV, 46 kV, and 34.5 kV. The Requester must contact the appropriate entity as shown in section 2.1 for information on the specific circuit(s) presently serving or available to serve their facility.

For AEP's Planning Criteria, including voltage criteria, please see AEP's *FERC 715* filings on AEP.com. The filings are separated by Regional Transmission Entity (RTE) and are named as follows:

- Transmission Planning Reliability Criteria - AEP PJM
- Transmission Planning Reliability Criteria - AEP MISO
- Transmission Planning Reliability Criteria - AEP SPP
- Transmission Planning Reliability Criteria - AEP ERCOT
- Transmission Planning Reliability Criteria - Pioneer Transmission, LLC

Transmission Planning will design solutions based on results of power flow analysis in accordance with AEP's planning criteria. Solutions will identify minimum required current carrying capability and establish Facility Ratings based on AEP's procedure for determining Facility Ratings.

The Requester will own the breakers, protection, and control for all equipment at its facility. The Requester is responsible for protection of its facilities from all abnormal conditions occurring on the transmission system. When the Requester's facilities are connected to AEP, the Requester must install, operate, and maintain all facilities AEP requires for safe operation and without cost to AEP. The Requester must install, operate, and maintain its facilities at all times in conformance with generally accepted utility practice and must comply with applicable National Electrical Code, National Electrical Safety Code, local codes, Regional Transmission Entity (RTE) requirements, North American Electric Reliability Corporation (NERC) Reliability Standards, and AEP service standards.

Under certain conditions, AEP may operate for a period outside the defined voltage ranges documented in AEP's **FERC 715** filings on AEP.com.. The Requester must provide voltage-sensing equipment required to protect its equipment during abnormal voltage operation.

If the Requester's supply voltage requirements are more restrictive than specified above, the Requester should consider adding appropriate voltage regulation equipment in its facility. The Requester is responsible for voltage regulation.

The Requester will change their facility or equipment as AEP or an RTE requires to comply with future changes in the transmission system. AEP will provide reasonable notice to the Requester, before the due date, when changes to their facilities are required. The Requester is responsible for the costs of any additions, modifications, or replacements to their facilities that are necessary to maintain or upgrade such facilities consistent with applicable laws and regulations, applicable reliability standards, and good utility practice.

The Requester will design the generating facility to maintain a composite power delivery at continuous rated power output at the POI of the generator substation, at a power factor within the range of 0.95 leading to 0.95 lagging, unless AEP has established a different power factor range that applies to all generators in the control area on a comparable basis. This power factor range standard must be dynamic and can be met using, for example, power electronics designed to supply this level of reactive capability (considering any limitations due to voltage level, real power output, etc.) or fixed and switched capacitors, or a combination of the two.

The NERC Reliability Standards state that distribution entities and customers connected directly to the transmission system should plan and design their systems to operate at close to unity power factor to minimize the reactive power burden on the transmission system. AEP interprets close to unity power factor to mean that the connected load should not fall below a 0.95 lagging power factor. Power factor penalties are applied based on local jurisdictional terms and conditions.

Switched shunt capacitors generally provide an effective means of controlling the power factor of a Requester's facility. However, several considerations should be addressed in applying capacitors. They include:

- Transient voltages due to capacitor switching.
- Voltage amplification due to resonance conditions.

Requesters should work with a qualified consultant to review the specific application and provide recommendations for controlling these occurrences.

Requester's equipment should, at a minimum, comply with the Information Technology Industry Council (ITIC) (Home - Information Technology Industry Council) curve for voltage sag ride-through performance.

Refer to section 6.13 for power quality requirements.

3.4 Generation Configurations

3.4.1 GSU Configurations

AEP has established generator step-up (GSU) transformer requirements as shown in section 4.3.6. The final decision as to the requirements for each installation will be made depending on:

- Requester's electrical location of the generator.
- Existing electrical facilities.
- Rating of existing electrical equipment and generators connected to the system, available short circuit contributions, and other important factors.

3.4.2 Induction Generators

Depending on the generator size, reactive power demands of induction generators can pose transmission system problems. The interconnection study process may identify the need for additional equipment that can keep negative impacts to the transmission system from occurring.

3.4.3 Inverter Systems

The reactive power requirements of inverter systems are similar to induction generators. Therefore, the general requirements discussed in the previous section apply. Refer to section 6.13 for additional considerations.

3.5 Sharing Results of Studies

Transmission Planning follows the RTE tariff procedures for sharing results of studies with the affected Transmission Owners outlined in the following sections.

3.5.1 PJM

For Transmission Owner to Transmission Owner interconnections, AEP participates in and supports PJM's annual studies to evaluate system reliability as described in **PJM Manual 14B** (PJM - Manuals). As part of the PJM review, it may be determined that there is a need for additional system reliability support across multiple Transmission Owner facilities. Solutions to the identified reliability issues are developed by the affected Transmission Owners in coordination with PJM. The study results and solutions are identified and confirmed when they are documented in the annual Regional Transmission Expansion Plan (RTEP) and posted to the PJM website, thus providing notice to all impacted stakeholders.

For EUC interconnection requests, Affiliate and Non-Affiliate customers submit interconnection requests as outlined in section 2.0. AEP takes the request and coordinates with PJM following the processes outlined in PJM OATT Attachment M-3. Projects approved in the local plan are included in RTEP for execution.

Generation and Merchant Transmission facility interconnection requests are submitted to PJM and processed through PJM's interconnection portal. The PJM process is detailed on their website and is described in Manual 14H (PJM - Manuals). This manual describes the roles of PJM, of the Transmission Owner, and of an Interconnection Customer (for example: Generation Developer) in the new PJM cluster study process.

3.5.2 ERCOT

For Transmission Owner to Transmission Owner interconnections, AEP actively participates within ERCOT's Regional Planning Group (RPG), which is an open forum for all stakeholders that adheres to ERCOT's Planning Guides and ERCOT's Regional Planning Group Charter. ERCOT Planning Guide, section 3, describes the Regional Planning process AEP follows once a Transmission Owner to Transmission Owner interconnection has been initially studied by AEP.

EUC interconnection requests are processed through ERCOT's RPG process utilizing the RPG Charter to classify the EUC request. Once classified, the interconnection request follows the processes outlined in *ERCOT Planning Guide*, section 3, and *Nodal Protocols*, section 3.

For Generation and Merchant Transmission facility interconnection requests, Interconnection Customers submit their applications to ERCOT through ERCOT's interconnection Resource Integration and Ongoing Operation Database (RIOO) portal. This database is used for communication across Transmission Owners, Transmission Planners, Generation Owners, and Applicable Generators detailed on their website. Additionally, the roles and responsibilities of ERCOT, the Transmission Owner, and the Interconnection Customer (for example: Generation Developer or Applicable Generator) are detailed on NERC's website.

3.5.3 SPP

For Transmission Owner to Transmission Owner interconnections, AEP actively participates within SPP's Open Access Transmission Tariff (OATT) Business Practice 7400 – Transmission Owner Project Evaluation. Transmission Owner to Transmission Owner interconnection requests are evaluated by SPP based on Business Practice 7400 for appropriate study process to be followed.

For EUC Interconnection requests, AEP actively participates within SPP's OATT Attachment AQ process for all retail Affiliate or Non-Affiliate wholesale load requests. EUC's requesting a new or modified delivery point submit a Request for Change in Local Delivery Facilities form to AEP and SPP mailboxes outlined in Table 1. SPP posts all Requests for Change in Local Delivery Facilities by day 20 of each month to their OASIS site. AEP conducts a load connection study, and results are passed to SPP to conduct a Transmission System Study.

For Generation and Merchant Transmission facility interconnection requests, AEP actively participates within SPP's OATT Attachment V process for generation connections. These Interconnection Customers submit their requests through the SPP generator interconnection queue process, which provides a means for Generation Planners and Developers to submit new generation interconnection projects into the queue for validation, study, analysis, and, ultimately, execution of a Generator Interconnection Agreement. SPP uses a Request Management System (RMS) for submitting interconnection request templates and data required.

3.5.4 MISO

For Transmission Owner to Transmission Owner interconnections, AEP follows MISO's **Business Practice Manual 020 - Transmission Planning**.

Note: Refer to MISOEnergy.org to review the Business Practice Manual.

Transmission Owner to Transmission Owner interconnection requests are evaluated by MISO according to **Attachment FF** of the MISO OATT and joint operating agreements with other RTOs as applicable.

Note: Refer to MISOEnergy.org to search for Attachment FF.

For Generation and Merchant Transmission facility interconnection requests, AEP follows MISO's OATT Attachment X process for generation connections.

Note: Refer to MISOEnergy.org to search for Attachment X.

3.6 Siting, Right-of-Way, and Environmental Requirements

3.6.1 Transmission Facilities Siting and Right-of-Way Requirements

The Requester will consult with AEP while evaluating a siting location for the interconnection facilities that the Requester will transfer to AEP during the interconnection process.

This activity must occur during the planning process and before real estate acquisition. This requirement applies to both:

- The Option To Build (OTB) process for facilities that the Requester will transfer to AEP.
- The acquisition of real estate and Right-of-Way (ROW) that the Requester will turn over to AEP as part of a non-OTB interconnection project.

This siting requirement section is applicable to all Generation Connections (GC), End-User Connections (EUC), Transmission Interconnections (TI), and Distributed Energy Resources (DERs).

Typical siting specifications include adherence to state regulatory filing and application requirements in coordination with a line route or substation siting study for a proposed interconnection facility. This documentation supports the environmental permitting process, landowner negotiation, and requests from local officials as well. A line route or substation siting study describes the alternatives considered and provides a comparative analysis of potential environmental and land use impacts and a rationale for the selection of the proposed site and/ or transmission line route. The siting study should describe the input collected from local officials, state and federal permitting agencies, and the local community relative to the site's suitability for the proposed facility.

The Requester is responsible for all of its own ROW procurement, costs, permits, etc., to establish its own energy supply interconnections. The Requester is also generally responsible for costs incurred by AEP. When obtaining ROW easements for facilities, the Requester shall negotiate and acquire these easements in accordance with AEP policies and by using an AEP approved form easement.

Refer to section 2.5 for more information. Refer also to *the* **Independent Power Producers Option to Build Guidelines**, linked within this document in section 2.5, which lists AEP's Enterprise Cyber Security Program, the AEP Substation Commissioning Checklist App, and the agreements needed to transfer facilities (such as a transfer of operational control and transfer of

ownership agreements). The Requester is expected to read and understand the expectations described in this document in the project's early stages.

3.6.2 Environmental Requirements

The Requester must work with AEP during the interconnection process to ensure that any facilities, land, or interests that the Requester will transfer to AEP comply with all applicable environmental requirements, law, and regulations.

3.6.2.0 Option to Build

AEP must review any permits and mitigation agreements with regulatory agencies before submittal to ensure consistency with AEP's processes and long-term facility management requirements. Compliance requirements apply to real estate acquisition and ROW that the Requester will transfer to AEP as part of an interconnection project. Compliance with these requirements can affect site location, design, and feasibility. Environmental specifications may vary by location and governing authority.

3.6.2.1 Required Documentation and Permits

For both OTB and non-OTB projects, the Requester is responsible for maintaining documentation related to the laws and regulations compliance.

The environmental requirements section of the Standards and Expectation for Siting, Real Estate, Right-of-Way, and Environmental Permitting for Transmission Interconnection Projects, and compliance to all applicable laws and regulations apply to all GC, EUC, IC, and DERs.

Typical environmental permits include, but are not limited to, Army Corps of Engineers section 10/404 (or state authorized program), State Section 401 Water Quality Certification, storm water general permits, and floodplain permits. Environmental requirements include adherence to the government authority's laws as well as the environmental requirements resulting from coordination of a line route or substation siting study for a proposed interconnection facility. Associated environmental studies that support the environmental permitting effort and siting study should include documentation collected from local officials as well as information gathered from state and federal permitting agencies relative to the site's suitability for the proposed facility.

The Requester must provide engineering and compliance documentation for environmental permits and all applicable laws and regulations before real estate is transferred to AEP, including support that the real estate is sufficient to comply with all laws and regulations for post-construction water management. For example, station pad design must accommodate post-construction storm water features in compliance with government authority's laws and regulations.

Refer to the Standards and Expectations for Siting, Real Estate, Right-of-Way, and Environmental Permitting for Transmission Interconnection Projects for additional details. The Requester is expected to read and understand the expectations in this document during the project's early stages and inform their engineering team of the requirements, laws, and regulations.

3.7 Large Load Cluster Studies

To support increasing demand for large load interconnections and to ensure consistent, efficient, and equitable evaluation of transmission system impacts, AEP is transitioning toward a cluster study approach for evaluating certain load interconnection requests. Under this framework, multiple interconnection requests may be grouped and studied collectively rather than evaluated individually.

A cluster study allows AEP to assess the combined impact of multiple proposed load additions on the transmission system, identify common transmission constraints, and develop coordinated solutions that consider the needs of all participating projects. Evaluating projects in groups provides a more comprehensive view of system requirements and helps ensure that transmission planning decisions appropriately reflect the cumulative effects of new load growth. This approach also improves transparency and consistency in the evaluation of multiple requests competing for limited system capacity. The concept has been successfully applied in other jurisdictions, including the Electric Reliability Council of Texas (ERCOT) batch study process established under Texas Senate Bill 6, as well as through the AEP Ohio Data Center Tariff, which utilizes a cluster-based methodology for evaluating large load additions in Ohio.

As AEP continues to develop and implement its cluster study framework, the company may periodically group eligible interconnection requests into study clusters for evaluation. The specific timing, eligibility requirements, study procedures, and customer obligations associated with future cluster studies will be communicated by AEP and may vary based on system conditions, regulatory requirements, and operational considerations. AEP reserves the right to determine when a cluster study process is appropriate, and how requests will be incorporated into a given study cycle, consistent with applicable tariffs, regulatory requirements, and business practices.

4.0 Design

The following subsections outline the requirements associated with the design phase of a typical project, including substation, equipment, protection, SCADA, metering, telecommunications, station service, and line design.

4.1 Transmission Station Design Requirements

4.1.1 Access Plan

For access areas to AEP interconnection facilities to be located on the Requester's property, a third party's property, or transferred to AEP, the Requester shall provide an access plan to AEP for review and approval. Such access plan is to document AEP access privileges to interconnection facilities on Requester's property, including, but not limited to, metering equipment, RTU equipment, telecommunications network equipment, and fiber optic facilities. The access plan described above shall be approved by AEP and implemented by Requester prior to AEP placing the interconnection facility in-service.

The Requester will execute any necessary documentation to grant AEP access to the interconnect facility. The Requester shall design the facility to maintain independent, unrestricted, and sole

access for AEP. Additionally, considerations should be made to ensure maintenance of both access and stormwater management facilities.

Refer to the requirements outlined in section 3.6 for more information.

4.1.2 Grounding

This section provides guidance on design and analysis of ground grids in substations that AEP will own and operate, and a Requester's ground grid that will be connected to or in close proximity to AEP's ground grid. Where the Requester's grid is connected to or in close proximity to AEP's ground grid, the Requester shall coordinate with AEP and comply with AEP ground grid design requirements as detailed in the latest revision of AEP standards *SS-313000 Station Ground Grid Design Guide*, *SS-311000 Grounding Application Guide*, and IEEE 80. For any conflict among documents, contact the Station Engineering Design Standards subject matter expert.

Contact the AEP project manager to obtain ground fault values and clearing times for AEP facilities. When Requester's grid is connected to or in close proximity to AEP's facilities the Requester must provide AEP with design drawings, analysis files that are compatible with AEP standards, and material lists for the proposed substation ground grid. Ground grid connections between AEP facilities and the Requester's facilities must be designed and installed in compliance with AEP standards.

4.1.3 Substation Fence

Where Requester's fence will tie to an AEP Substation fence, the Requester shall notify AEP of the design intent and coordinate the tie point(s), and the Requester shall also comply with the grounding requirements as detailed in section 4.1.2.

Fencing that encircles AEP owned facilities must comply with the latest revision of AEP standard SS-250100 Station Fence Guideline, SS-250500 Substation Fence Specification, Independent Power Producer (IPP) Option to Build Guidelines, and National Electrical Safety Code (NESC) requirements.

4.1.4 Substation Bus Design

Where Requester is interfacing with AEP substation bus, the Requester shall match heights and phase spacing of AEP facilities at the point of demarcation as identified in the interconnect agreement. The preferred method of making connections to AEP facilities is through overhead flexible stranded conductor.

Measures should be taken to ensure the interface between the Requester and AEP does not result in a limiting series element that will affect Facility Ratings.

4.1.5 Substation Shielding (Lightning Protection)

Where AEP equipment is located within the same fence as Requester's facilities, the lightning protection system must be designed at a minimum in accordance with the latest version of *SS-400999 Lightning Protection Application Guidelines*. The Requester will perform a shielding study and the Requester will submit design drawings and analysis files to AEP for comment. The Requester must provide locations and attachments for required shield wires that will be terminated on the AEP or Requester's facilities. AEP will determine structural loading requirements on a case-by-case basis as defined in section 4.2.

4.1.6 Substation Lighting

Stations containing AEP owned equipment shall comply with the AEP lighting standard *SS-410000* latest revision. Service Lighting is not required on new AEP substation installations. Security Lighting (0.5FC minimum) must be provided at all AEP facilities. With security lighting, personnel must be able to observe equipment locations from outside the station fence, and such lighting will serve as a deterrent to keep people from trespassing and/or tampering with equipment.

4.2 Substation Structures

4.2.1 Structure Loading

In situations where one or more of the Requester's structures is supporting strain bus, rigid bus, conductor, or shield wires that are connected to AEP structures, those structures must be designed for strength and deflection to meet AEP's structural loading criteria found in AEP *SS-720000 Specification for Station Structural Steel Material and Fabrication* and *SS-720010 Specification for the Design and Loading of Substation Structures*. The Requester shall coordinate with AEP on tensions and fault loads for these structures.

4.3 Equipment

4.3.1 Fault Interrupting Devices

A fault-interrupting device must be the initial connection point (immediately after the isolation device) inside the Requester's substation. It is the Requester's responsibility to protect all their equipment and prevent faults on their system from affecting AEP's facilities and other customers. The Requester may need to install and pay for additional station facilities to establish their desired service or to establish a looped transmission line extension. From an electrical service point of view, it is most desirable for a Requester to locate their substation facilities near an AEP transmission line or substation. If a radial line (longer than one mile) is required from the tap point on a transmission line to the Requester's facility, a breaker may be required at the tap location in addition to the breaker at the Requester's facility. This specification will be determined on a case-by-case basis. It is solely AEP's discretion to allow variances to this practice.

If a Requester proposes to use a fuse as the interrupting device, refer to section 4.3.6.1.

AEP does not allow the installation of a MOAB ground switch combination on the high side of transmission/step-down transformers unless a special need or situation warrants review. All new connections or material modifications to existing connections must comply with the diagrams and requirements shown in section 3.1.

Requester-owned load serving transformers located within the same fenced station as AEP Transmission circuit breakers, do not require Requester-owned fault interrupting devices when connected between two AEP Transmission circuit breakers (for example: a breaker and a half or ring bus designs). Requester-owned load serving transformers within the same fenced station connected directly to an AEP bus will require a Requester-owned interrupt device. In the rare occasion where non-AEP Requester-owned equipment is located within the same fenced station as AEP Transmission equipment, an agreement is required to define maintenance, operations, and NERC Standard compliance responsibilities. If or when an EUC or Load customer adds BTMG or DERs of any sort, modifying the delivery point, the impact to the transformers needs restudied

and remodeled prior to energization. EUCs are expected to provide DER/BTMG models accordingly. Refer to section 4.4.1.3 for additional information.

4.3.2 Isolation Devices

The Requester must provide a readily accessible, lockable, visible-break isolation device as the first device connection inside the Requester's station.

The Requester's isolation device may be included in AEP's *Switching Order System Procedur*e, as necessary. Access to the Requester's isolation device must be provided if clearance is necessary on Requester facilities.

4.3.3 Equipment Ratings

AEP establishes facility and equipment ratings requirements during a project's planning phase. In accordance with section 4.1.5, the Requester must complete both the insulation coordination and lightning shielding studies and requirements.

4.3.4 Circuit Breakers and Switches

Before construction, the Requester must provide AEP with the characteristics of the units to be installed for evaluation as identified in section 3.1 for load connection types/diagrams and section 3.2 for transmission switching guidelines. The manufacturer must provide the maximum capability values of the circuit breaker/switcher as tested and not IEEE preferred rating values.

AEP will work with the Requester to determine high-speed reclosing (HSR) coordination times. Typical HSR coordination times are listed in the following table.

Table 4: HSR Coordination Times

System Voltage (kV)	Trip Close Time (Cycles)
765	30
345	24
230	21
138 (and below)	18

4.3.5 Line Traps

4.3.5.0 Load Connection Requirements

Line traps may be required with load connections. Carrier signals can be degraded by transformers and/or tapped loads that are electrically located at multiples of the quarter wavelength of the carrier frequency on the line. It is not practical to predict with accuracy whether newly tapped load will create this condition. The Requester will be responsible for costs necessary to ensure that the new Delivery Point (DP) does not degrade the power line carrier signals or protection scheme.

This cost may require installing one or more line traps tuned to the carrier frequency on the appropriate phase at the point of connection. The Requester can install the line traps in advance

or wait to determine whether a line trap is necessary at the time of energizing the newly tapped station. However, if the Requester waits to install the line traps, and it is later determined that the new installation has degraded the carrier signals, then the DP will be de-energized until a line trap is installed to eliminate the source of carrier signal degradation.

4.3.5.1 Shunt Devices

If a shunt reactor or shunt capacitor bank is connected directly to a transmission line that uses power line carrier (PLC) protection communications, then line traps are required to be installed on all phases to which the carrier signals are coupled. These line traps shall be installed within 1000 feet of the transmission line's tap point to prevent signal loss.

4.3.6 Transformers

4.3.6.0 Voltage and Impedance Matching

The Requester is responsible to ensure all de-energized tap changer settings available will not be detrimental to AEP system or their own system. De-energized tap changer (DETC) ratings must match that of AEP transformers in connecting substations. Additionally, transformer impedance must match that of any paralleled transformer (AEP). These requirements are in place to prevent circulating currents and the consequential overloading of AEP facilities.

4.3.6.1 Requester High Voltage Transformer Fusing Requirements

If a Requester proposes to use a fuse as the interrupting device for a high voltage transformer, the fuse must have a total clearing time for a fault immediately downstream of the fuse less than the minimum clearing time of AEP upstream protection and interrupting devices. The AEP minimum clearing time for this scenario is typically 5.0 cycles. The Requester's fuse must fully clear the fault so that the following AEP reclose attempt can be successful to restore the circuit and other AEP customers.

Important: AEP's Protection and Control Engineering (PCE) Department must pre-approve the Requester's proposed fuse size.

Note that fuses will not be acceptable if the Requester has generation sources as part of their facilities. In addition, if generation sources are added to Requester facilities later, the fuses must be replaced with an interrupt device that can be operated from transfer trip protection devices, as necessary.

4.3.6.2 Transformer Winding Design

All EUCs must provide a delta connected winding on the AEP line terminal side of the transformer. All GCs must provide an effectively grounded connection on the AEP line terminal side of the transformer. The GC's transformer must remain effectively grounded on the AEP line terminal side of the transformer even when the transformer is unloaded. EUCs that want to include generation resources within their facility or add generation resources to an existing facility should refer to section 4.4.1.3 for guidance.

4.4 Protection Systems

4.4.1 System Protection and Coordination

4.4.1.0 Basic Protection System Design for Interconnect Projects

There are two basic protection systems that could be implemented on Requester interconnections: bus protection and line protection. This section describes both systems. The system that is chosen depends on the distance between the Requester and AEP, whether ground grids are tied together, and whether the Requester has a generation source. Generation sources can come from primary generation sources, emergency generation sources, or ties to alternate sources of power.

- **Bus Protection System**
    - This system is generally used when the interconnection stations are adjacent to each other, and the ground grids are tied together. AEP requires redundant three-phase current circuits from each Requester interface (overlapping the Requester protection zone) to complete the bus protection zones. Interface cabling for trip, control, and status signals will depend on the Requester's facility configuration and whether the Requester has generation sources.
    - The interface connection must be within the AEP protection zone and isolated by AEP protection devices (Interrupt devices from both AEP and the Customer may need to be operated depending on Customer generation sources). The Requester is not required to have protection devices for the interface connection when this system is used. All equipment downstream of the Requester interrupt device will be in the Requester protection zone and isolated by Requester protection devices.
- **Line Protection System**
    - Step Distance Protection System
        - This system is used when the interconnection stations are not adjacent to each other, and the Requester has no generation sources.
        - The interface line connection must be in the AEP protection zone and isolated by AEP protection devices. The Requester is not required to have protection devices for the interface line connection when this system is used. All equipment downstream of the Requester's interrupt device will be in the Requester protection zone and isolated by Requester protection devices.
        - The Requester should understand that when this protection system is used, the AEP protection devices will have high-speed operation for all faults up to and including a portion of the Requester transformer. The AEP total clearing time must allow time for the Requester protection devices to operate and trip the Requester interrupt device for proper isolation and targeting, even though the AEP interrupt device can still trip and isolate the customer for this event.
        - Following the initial isolation from AEP, AEP interrupt devices will be allowed to reclose automatically and re-establish power up to the Requester's interrupt device.

Note: The AEP protection devices and interrupt devices could clear the fault in five cycles. The Requester relay device or fuse must operate faster than the AEP clearing time for the interface line connection to successfully re-energize the Requester's connection and possibly re-energize other AEP customers. If the Requester applies a fuse, it must have a total clear time faster than five cycles for a fault immediately downstream of the fuse.

- AEP's PCE Department must pre-approve the Requester's proposed fuse size.

- Pilot Protection System

  Pilot protection systems are required on Bulk Electric System (BES) facilities. AEP reserves the right to apply pilot protection systems on non-BES facilities. AEP reserves the right to apply dual pilot protection systems (two pilot protection systems with independent communication paths) to either BES or non-BES facilities as necessary for either coordination or stability.

  - Current Differential Line Protection Scheme

    The current differential line protection scheme is the preferred pilot protection system when the interconnection stations are not adjacent to each other, and the Requester has generation sources.

    The interface line connection must be in a shared protection zone between AEP and the Requester. The Requester will purchase and install interface line protection devices according to AEP requirements (refer to section 4.4.1.1). All equipment on the Requester side of the Requester interrupt device must be in the Requester protection zone and isolated by Requester protection devices.

  - Directional Comparison Blocking Protection System

    The Directional Comparison Blocking (DCB) protection system is the alternate pilot protection system when the interconnection stations are not adjacent to each other, and the customer has generation sources. The DCB protection system may be required when the Requester connects into AEP facilities that have existing DCB protection systems or Power Line Carrier (PLC) protection communications are required for new facilities. The interface line connection must be in a shared protection zone between AEP and the Requester. The Requester will purchase and install interface line protection devices according to AEP requirements (refer to section 4.4.1.1). All equipment on the Requester side of the Requester's interrupt device must be in the Requester's protection zone and isolated by Requester protection devices.

    Note that this alternate scheme is included for uncontrollable situations. The current differential line protection scheme provides a more reliable interface protection system. To apply the current differential protection scheme, the necessary fiber facilities must be included in the initial scope of the project.

AEP's Protection and Control Engineering Department must pre-approve Requesters proposal to use the directional comparison blocking protection scheme.

- Breaker Failure Protection System

  Breaker failure protection systems are required on BES facilities. For non-BES facilities, AEP reserves the right to require installation of breaker failure protection systems at the Requester's facility and/or at the AEP facility.

- Anti-Islanding Protection

  If the Requester's facility is either a DER - or an EUC that contains generation sources, then the Requester must have an anti-islanding protection system. If a Requester installed anti-islanding system is not viable or if AEP determines additional protection is necessary, then AEP reserves the right to require installation of a direct transfer trip (DTT) system, or other islanding detection method of AEP's choosing, between the AEP facility and the Requester facility.

4.4.1.1 Coordination of Protective Systems

NERC standards require that protective systems be coordinated among operating entities. These standards require transmission and generator owners to notify appropriate entities of relay or equipment failures that could affect system reliability. In addition, transmission and generator owners must coordinate with appropriate entities when new protective systems are installed, or when existing protective systems are modified. It is expected that any data exchange necessary to meet the obligations of the NERC Standards will be accomplished before any protection systems are placed in-service. The interconnecting entity submits proposed protection settings to PRC-027@aep.com. It is expected that settings coordination should take at most four weeks. Refer to section 2.1 for more information.

4.4.1.2 System Protection Devices Requirements

It is AEP policy to apply fully redundant protection systems at 200 kV and above. This includes batteries, DC panelboards, trip coils, high-speed protection systems, communication paths, and Instrument Transformers (IT) (dual secondary windings on one set of potential devices is acceptable). At all voltage levels, prior to the design phase, the Requester and AEP must reach a mutual agreement as to the redundancy requirements, type, model numbers, and firmware version of protection devices related to the proposed pilot relaying scheme to ensure proper operation and equipment compatibility. Note that if the protection system is designed with insufficient redundancy (for example: fiber communication cables), the Requester will be required to take their resource offline when non-redundant protection device is failed or out of service for maintenance.

The Requester must install protective devices (relays and circuit breakers for example) and synchronizing equipment that AEP requires. The protective devices may differ between installations.

The Requester must submit relay one-line drawings of its interconnection protection devices to AEP for review. AEP will assess the protection and remote monitoring/control functions illustrated in the drawings. The Requester must make changes that AEP requires prior to final issue. The Requester must provide final copies of the revised drawings to AEP. AEP will review only the portions of the drawings that apply to protection and remote monitoring/control that

affect the AEP system. To aid the Requester, AEP may make suggestions on other areas, but AEP will not assume responsibility for the correctness pertaining to the Requester's system.

The Requester is responsible for their system's stability and providing adequate facilities so that critical fault clearing times are met.

The Requester must not connect to AEP's system until AEP gives consent. AEP reserves the right to inspect the Requester's facility and witness equipment or device testing associated with the interconnection. Additional operating procedures may be included in the Interconnection Agreement (IA). Refer to *SS-451001 AEP Protection Requirements for Connecting to the AEP Transmission Grid* for more information.

4.4.1.3 Protection Requirements for Generation Installation at EUC

An End User Connection (EUC) Requester may choose to install generation within their facility. The protection requirements depend on a number of factors and will be determined on a case-by-case basis. Here are some points that need to be considered.

- Will the installed generation ever be paralleled with the transmission system? If 'no,' then there are no transmission protection requirements as of the effective date of this document. However, the EUC Requester must ensure the terms of future updated transmission interconnection requirements or applicable retail tariff updates are configured within their systems to comply with ongoing operating transmission system parameters as ordered by new regulatory directives or otherwise.
- Is the installed generation paralleled with the transmission system but never used to export power to the transmission system? If 'yes,' then the EUC Requester is required to install a protection system within their facility that will clear the generation source for all faults on the transmission system. The EUC Requester must provide technical documentation that describes the protection system that will be used and how it will function.
- Will the installed generation be used to export power to the transmission system, or is the generation capability greater than 20 MVA? If 'yes,' then the protection requirements outlined in section 4.4.1.0 shall be followed.
- Is the EUC with the installed generation directly connected to a transmission line that uses a pilot protection system? If 'yes,' then the EUC Requester may need to install line relaying that interfaces with that pilot protection system.

The questions above provide some general guidance and do not cover all possible connection scenarios. AEP's PCE Department shall make the final determination regarding the protection requirements for a customer facility with parallel generation.

4.4.1.4 Protection Modifications to Existing AEP-Owned Transmission Lines

If a Generation Connection to an existing AEP transmission bus (see Figure 6) or to an existing AEP transmission line (see Figure 7) can result in a weak source connection to the AEP system under system normal or single contingency conditions (for example: one AEP-owned line out of service), then AEP reserves the right to require installation of fiber optic cable and current differential line protection on each AEP-owned line that exits the AEP interconnecting substation.

For protection requirements for the line between the AEP substation and the Requester substation, refer to section 4.4.1.0.

4.4.2 Control Cable

AEP uses shielded control cable with both ends grounded. The color codes of control cable for AC or DC circuits must be constructed to match table E-2 of ICEA S-73-532, NEMA WC-57 (black, red, blue, orange, yellow, and brown, for example). The color codes of AC power cables must be constructed to match table E-1 of ICEA S-73-532, NEMA WC-57: black, white, red, and green. If the Requester's interconnect cables do not match these codes, the Requester must wrap each interconnect control wire with the appropriate color code tape. Refer to *SS-480001 Design and Wiring Guide* for more details.

The AEP preferred control cable demarcation point is at the AEP substation fence between AEP's substation yard and Requester's substation yard. It is the Requester's responsibility to supply material and labor for cables and demarcation cabinet installed from their facilities to the demarcation cabinet. AEP is responsible for supplying material and labor for cables installed between AEP's facilities and the demarcation cabinet. Before project construction, AEP must approve any deviations from its preferred control cable demarcation point.

4.4.3 Disturbance Monitoring Requirements

AEP requires disturbance monitoring on all generation resources connected to the AEP Transmission System. Disturbance monitoring includes fault recording and sequence of events recording on the interface, each main power transformer, and each collection feeder (as necessary); and phasor measurement unit recordings at each main power transformer . AEP is solely responsible for determining exclusions to this requirement on a case-by-case basis.

The disturbance monitoring equipment (DME) location will depend on the generation resource's configuration. The Requester must submit their facilities' relay one-line diagrams to AEP. If sufficient disturbance recording data cannot be collected at the AEP interface substation, the Requester must supply monitoring equipment that will support the necessary disturbance monitoring data. AEP must approve the Requester's data format. AEP will identify the required monitoring locations based on the Requester's relay one-line diagram. Locations could include monitoring each unit in a conventional generation resource and each feeder in a renewable generation resource. In addition:

- The Requester must replace legacy equipment if they cannot provide data in the requested format.
- All DME must be equipped for time synchronization.
- If AEP requires DME installation in the Requester's facilities, the Requester must provide communication facilities so that AEP can collect disturbance monitoring data remotely.
- AEP's monitoring requirements do not reduce the Requester's obligation to meet all NERC disturbance monitoring requirements.

4.5 Supervisory Control and Data Acquisition (SCADA) Requirements

4.5.1 Data Requirements

Telemetry and status information is required from interconnected facilities rated at 10 MVA Mega Volt-Amps) or higher for AEP to fulfill its Real-time monitoring and assessment obligations. The primary means AEP will use to obtain this data will be Inter-control Center Communications Protocol (ICCP) communication links already in place with the RTE. AEP will request the specific data points from the RTE in which the Requester's facility is located.

If a GC Requester is connecting to AEP-owned Transmission facilities and is not able to provide all necessary data to the RTE, AEP will work with the Requester to establish an alternate means of obtaining the necessary Real-time operational data until the RTE ICCP link can be established. In cases where fiber-optic facilities described in section 4.6.10 are put in place for reasons other than operational data exchange, AEP may choose to establish a serial connection over those facilities based on the *SS-500000 AEP SCADA RTU Requirements for Transmission Interconnection Facilities*. The term and method for all data exchanges will be outlined in the Interconnection Agreement.

SCADA requirements for DER connections to an AEP LSE are found in the *AEP DER Technical Interconnection and Interoperability Requirements (TIIR)* document. Non-Affiliated LSE Requesters may be required to provide Real-time telemetry for DER capacity behind a wholesale connection. Likewise, EUC Requesters with significant amounts of transmission connected BTMG resources intended to offset load may also be required to provide Real-time telemetry, in accordance with RTE requirements so that their generation may be adequately addressed by AEP's RTCA systems. Such telemetry will be provided on an equivalency basis for each interconnection that represents 10 or more MW of aggregate generation capacity.

Sections 4.5.2 and 4.5.3 detail the specific telemetry and status points required from interconnecting facilities. Note that not all of the points listed below are universally required. Certain points only apply to Requester facilities of a certain type as designated. The final points list will be engineered for each interconnecting facility based on the design and capabilities of that facility.

AEP Transmission will not install an RTU on the premises of interconnecting facilities (substations) it does not own and will not operate Requester's equipment at such locations except in unique cases where a specific detailed supplemental operations agreement to do so is in place. (refer to section 6.1.) Requesters are responsible for providing facilities for acquiring Real-time operational data from equipment they own and will be responsible for providing that data to AEP Transmission and the appropriate RTE.

4.5.2 Telemetry

Analog telemetry from interconnecting facilities includes power flow and voltage measurements needed by AEP Transmission to perform accurate state estimation and contingency analysis required for situational awareness for reliable operation of the transmission grid.

Table 5: Transmission Line Measurements

Voltage per phase for Requester-owned end of each transmission line	kV
MW for Requester-owned end of each transmission line	MW
MVAR for Requester-owned end of each transmission line	MVAR

Table 6: Generator Collector Transformer Measurements

Voltage per phase for each winding of each transformer (wind/solar)	kV
MW for each side of each transformer (wind/solar)	MW
MVAR for each side of each transformer (wind/solar)	MVAR

Table 7: Generation Measurements

Generation gross MW (each thermal-powered unit)	MW
Generation gross MVAR (each thermal-powered unit)	MVAR
Generation station use MW auxiliary (per AUX transformer) (thermal-powered units)	MW
Generation station use MVAR auxiliary (per AUX transformer) (thermal-powered units)	MVAR
MW for each collection feeder (wind/solar)	MW
MVAR for each collection feeder (wind/solar)	MVAR

Table 8: Non-Auxiliary Load Collocated with a Generation Facility

MW for non-auxiliary load (per transformer)	MW
MVAR for non-auxiliary load (per transformer)	MVAR

Table 9: Generator Shunt Devices/Reactive Quantities

MVAR for each shunt device (capacitors and reactors)	MVAR
Dynamic MVAR capability at the current MW generation amount (each dynamic reactive controller)	MVAR
Voltage set point (each dynamic reactive controller)	kV
Power factor set point (each dynamic reactive controller)	pf

Table 10: Resource Availability for Injection for Real or Reactive Power (Applies to Wind, Solar, and Storage)

Number of wind turbines or inverters connected to transmission system (entire generating facility)	# of units
Number of wind turbines or inverters connected to transmission system (per collection feeder)	# of units
Number of wind turbines or inverters out of service and unavailable (per collection feeder)	# of units
Number of wind turbines or inverters with communications failure and unknown availability (per collection feeder)	# of units
Amount of energy remaining (storage)	MWh

4.5.3 Status

In addition to Real-time telemetry values, the operational status of key interconnected facilities must be available to AEP Transmission in Real-time.

Table 11: Transmission Line Status

Breaker Status for Requester end of each transmission line	OPEN/CLOSED
Circuit Switcher/Line Switch Status for Requester end of each transmission line	OPEN/CLOSED

Table 12: Generation Facility Status

Generation Breaker Status (Thermal-Powered Units)	OPEN/CLOSED
Auxiliary Breaker Status (Thermal-Powered Units)	OPEN/CLOSED
Transformer High-Side Breaker and/or MOAB Status (Wind/Solar)	OPEN/CLOSED
Collection Breaker Feeder Status, Each Feeder (Wind/Solar)	OPEN/CLOSED
Bus Tie Breaker Status	OPEN/CLOSED
Automatic Voltage Control	DISABLED/ENABLED
Blackstart Availability	OFFLINE/AVAILABLE

Table 13: Generator Reactive Device Status

Shunt Device (Capacitor, Reactor) Breaker Status	OPEN/CLOSED
Dynamic Reactive Controller Status	DISABLED/ENABLED

Dynamic Reactive Controller Operation Type	MANUAL/AUTO
Dynamic Reactive Controller Mode	VOLTAGE/POWER FACTOR

4.5.4 Supervisory Control of Requester Facilities

AEP will not operate equipment for which it is not responsible. Therefore, these general Real-time operational data requirements exclude supervisory control points for Requester facilities. In some cases, AEP may enter into a specific supplemental operations agreement to operate Requester-owned equipment, and AEP could require supervisory control points in order to perform contractually defined duties. In addition, certain status and analog points not covered in this document may be needed. Real-time operational data requirements for such agreements are out of scope for this document and will be addressed individually according to their respective supplemental operations agreements.

4.5.5 SCADA Requirements for AEP Facilities

Before AEP approves an interconnection request, facilities must be equipped with full Supervisory Control and Data Acquisition (SCADA) capability. Existing AEP-owned facilities that provide a connection to the Requester, or facilities the Requester will build, and AEP will own under an option to build (OTB) arrangement must meet the following specifications:

- Have a combination of an RTU and intelligent electronic devices (IEDs) at an AEP-owned substation or switching structure. The SCADA equipment must be engineered and installed according to AEP's internal standards. AEP will operate and maintain the equipment exclusively.
- Provide full visibility and supervisory control of AEP's interconnection facility by using a full complement of Real-time operational data needed for situational awareness. This data will include (but not be limited to) all voltage, current, power measurements, as well as status and alarm indications for all primary facility components.
- Supervisory control is required for all equipment, primarily circuit breakers and MOAB switches used to interconnect the Requester to AEP. Point selection for the AEP-owned facility must be made in conformance with *SS-502000 Substation SCADA*.
- Connections to AEP are not permitted at locations or facilities that do not provide adequate situational awareness and supervisory control to AEP Real-time Operations personnel and RTEs.

4.5.6 Requester Real-Time Operational Data Requirements

Requesters may require Real-time operational data from AEP facilities in order to maintain their facilities' safe and reliable operation. AEP supplies all required Real-time operational data to the RTEs in which it is registered. AEP's strong recommendation is that Requesters obtain such data by using ICCP interactions with those RTE entities. If ICCP use is not feasible, the Requester can request direct access to Real-time operational data for AEP facilities related to its transmission system connection.

AEP will provide limited access to revenue meters and/or remote terminal units (RTUs) capable of providing that data per the *SS-500000 AEP SCADA RTU Requirements for Transmission Interconnection Facilities*. Fulfillment of such requests will be documented in the interconnection agreement and fall within the bounds of AEP Transmission standards and common utility practice. Data connectivity for Requester data acquisition connections will be established by the Requester in accordance with fiber optic or other communications facility requirements covered in section 4.6.10 in this document.

4.6 Metering Requirements

This section specifies AEP's metering requirements for connecting to its transmission system. These requirements apply to all facilities requesting connection to AEP. References to a "metering package" include the revenue meter, metering ITs, and related equipment associated with the accurate measurement of three-phase electrical energy and power.

4.6.1 Industry Standards Exceptions

To the extent that these requirements conflict with the standards and guidelines of any applicable RTE regarding transmission interconnection metering requirements, the standards and guidelines of such RTE take precedence.

4.6.2 Introduction

The metering package design must be sensitive to a wide range of applications for accurate metering of any bidirectional or radial TI over the full range of possible scenarios. As an example, the metering package will accurately meter interconnections with injected generation (100s MW) in one direction and backfeed power (less than 1 MW) in the reverse direction.

Depending on the metering criteria, telemetry requirements may vary slightly. Therefore, the design of the metering package devices must be flexible. Metering device redundancy is supported (primary and backup energy meters) because transmission revenue metering data is critical. If a project requirement is not covered in this document, or if there are any questions regarding revenue metering application design, consult with AEP's PCE Standards Metering group for clarification. Also, refer to the following AEP transmission standards for more guidance:

- *SS-497001 Transmission Intercompany & IPP Metering Guide*
- *SS-490050 ERCOT-EPS Metering Design Guide*

Note: For section 4.6 Metering Requirements, EPS refers to ERCOT Polled Settlements.

- *SS-494001 Transmission Customer Metering Design Guide*.

4.6.3 Requesters and Metering Criteria

- **Affiliate EUC Requester**

  AEP will provide functional specifications for the revenue metering at the Requester's facility for the Affiliate EUC. The criteria for these functional specifications will be based on existing AEP measurements practices and standards. AEP reserves the right to specify

and approve the type and manufacturer of all associated revenue metering equipment, including the instrument transformers. If requested, subtle changes to the standard AEP metering package are acceptable with mutual agreement between AEP and the Requester. AEP will own the metering package and have testing responsibility.

- **Non-Affiliate EUC Requester**

  This Requester can own the metering accuracy ITs. AEP will provide functional specifications for the revenue metering package. The criteria for these functional specifications must be based on existing AEP measurements practices and standards. AEP reserves the right to specify and approve the type and manufacturer of all associated revenue metering equipment including the instrument transformers. Specific agreements will describe exceptions and IT ownership details. AEP will own the meter and have meter testing responsibility.

- **Transmission Interconnection (TI) Requester**

  This Requester can have metering package ownership when the transmission line ownership boundary occurs at the Requester's facility. It eliminates the need for compensation calculations related to line loss. If it is determined that the TI Requester will own/maintain the metering package, the Requester will provide AEP with accuracy documentation of the metering package components.

- **Generator Connection (GC) Requester**

  GC also known as Independent Power Producer (IPP). The GC/IPP revenue meter location can vary, but the preference is to install the GC metering package at the AEP station/POI, which AEP owns/maintains, and may result in the need for loss compensation calculation. Separate GC auxiliary load metering will be required if the specified metering on the generation connection does not provide adequate meter accuracy for GC backfeed load, or if GC facility auxiliary loads can have different owners. A GC facility can have two different sources for AUX load- from the AEP substation to which they are connected (POI) and from local distribution. The distribution feed to a GC facility is metered by the local Load Serving Entity (LSE) provider.

  When multiple generators co-generate behind a single AEP interconnection point, the POI meter alone is not adequate to accurately settle in the RTO's market resulting in the need for additional metering referred to as submetering. The submetering will be installed inside the IPP's facility and will need to be designed such that each Generator's (required based on fuel type and/or corporate entity) total power flow in both directions can be accurately captured independently. For ERCOT Polled Settlement (EPS), metering requirements are fundamentally different than non-ERCOT (PJM and SPP). To learn more about Generator metering requirements from a RTO's point of view, refer to PJM Manual 14D and ERCOT Nodal Protocols section 10.

  AEP's Transmission System Load Management (Settlements) is the meter agent for the PJM and SPP region. POI meter, and when applicable submeter and/or AUX load meter, data must be made available to AEP's Transmission System Load Management (Settlements).

  If AEP is not the LSE, then the LSE owner may have meter data requirements, and those requirements will be addressed during the detailed scoping phase of the project.

ERCOT is the meter agent for EPS meter boundaries within AEP Texas's service territory and approves IPP metering requirements, which are scoped and engineered by AEP. WSL stands for Wholesale Storage Load. It is an acronym specifically used within the ERCOT footprint. The overall WSL metering design for a Transmission voltage connected IPP Battery Energy Storage System (BESS) is fundamentally different from a Distribution voltage connected DER BESS. For the purpose of this document, we are only covering Transmission connected IPP BESS. (To learn more about WSL metering design for a Distribution connected DER BESS, see AEP's DER TIIR document). According to section 2 of ERCOT protocols, WSL is defined as "Energy that is separately metered from all other Facilities to charge a technology that is capable of storing energy and releasing that energy at a later time to generate electric energy." WSL metering is used to capture battery charging power for which the resource pays wholesale pricing. For WSL metering behind a point of interconnect meter, the two are used in conjunction to determine retail and wholesale loads. All WSL metering points are considered EPS metering.

Note: Reference ERCOT Protocol section 2: Definitions and Acronyms, "Load" definition, and section 10 Metering for further information.

Given the complexities described above, **metering requirements for a GC are evaluated on a case-by-case basis.** Answers to the following questions will help AEP determine the metering requirements for a single Generator or Multiple Generators cogenerating behind a single POI:

- What is the typical minimum auxiliary load when the IPP is not generating power?
- Who is the LSE for the IPP's AUX load? Note that within AEP's Transmission footprint, AEP is **not** always the distribution service provider. Developers can refer to the local utilities commission's service area map to identify the appropriate LSE. The physical location of the Wind Turbines, Solar panels, and BESS will determine the LSE. If the proposed generator or BESS facility is physically located in two or more LSE service territories, then the service territory where the majority of the generators or BESS are located determines the LSE. If there are multiple generators and BESS behind a single POI, then AEP will need to know the LSE and AUX load for each of the generator?
- If the IPP's AUX load is being served by a Non-Affiliate LSE (AEP's wholesale customer), then what metering requirement does the LSE have?
- If there are multiple generators co-generating behind a single POI, then AEP will need to review the IPP's one-line to help them figure out the submetering requirements.
- If the IPP is connecting to another TO, but the IPP's AUX load belongs to an AEP Affiliate Operating Company (which is the LSE), then the AEP Affiliate Operating Company will specify the AUX load metering.

Refer to *ERCOT Protocol* section 10 and *Settlement Metering Operating Guide* (SMOG) located in ERCOT's official website for ERCOT EPS metering one-line examples. For the PJM and SPP regions, see the metering one-line diagrams below for reference. Please

note that these metering one-line diagrams are intended solely for IPP metering purposes and do not serve as guidance for protection system.

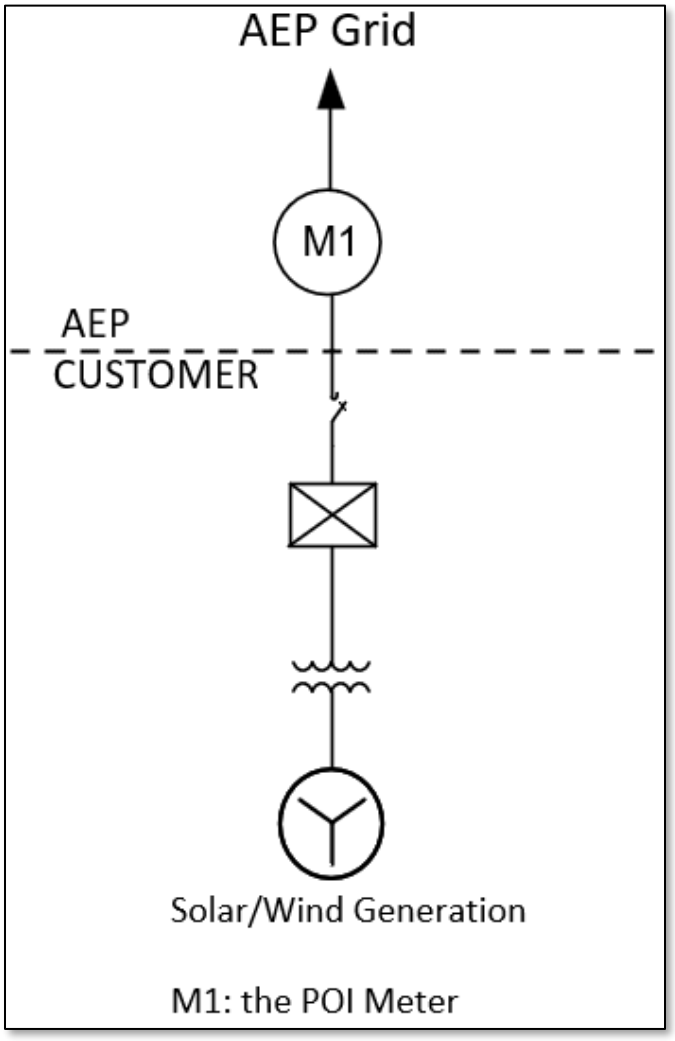

Figure 9: A Single Generator Connected to a Single POI

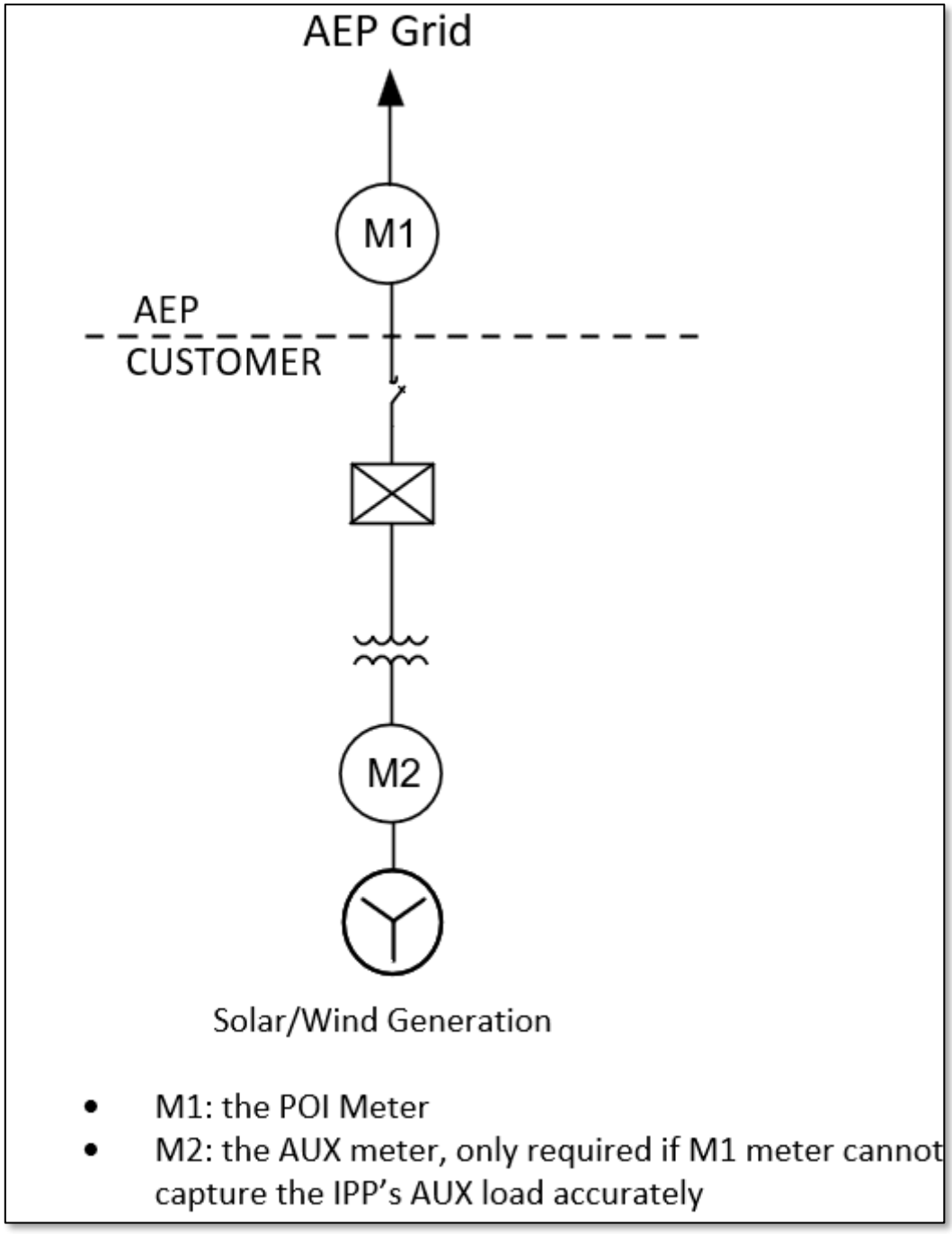

Figure 10: A Single Generator Connected to a Single POI with an Additional Meter M2 Installed inside the Developer's Facility to Capture the AUX Load

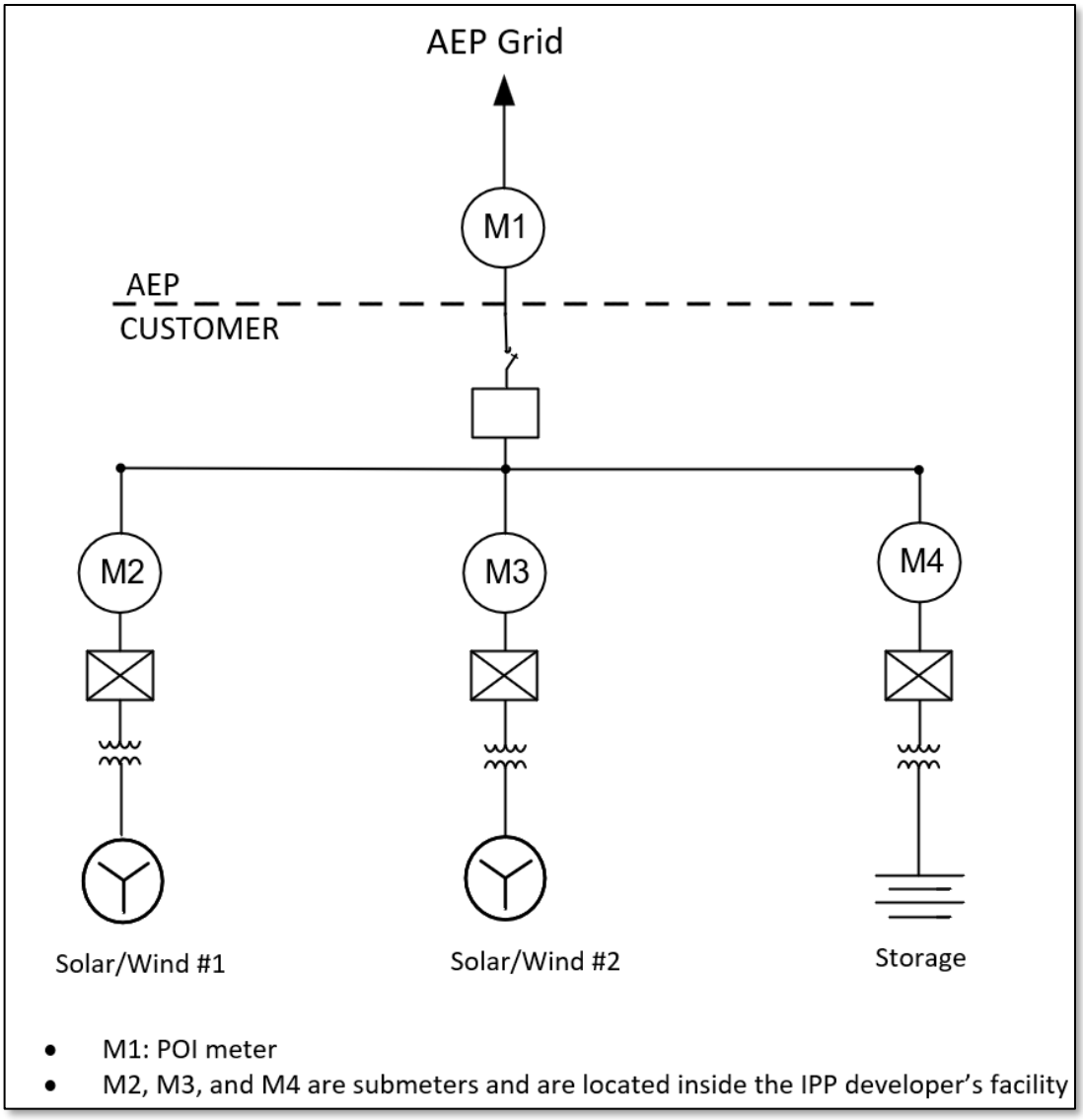

Figure 11: Multiple Generators with One or Multiple Owner(s) Co-Generating Behind a Single POI

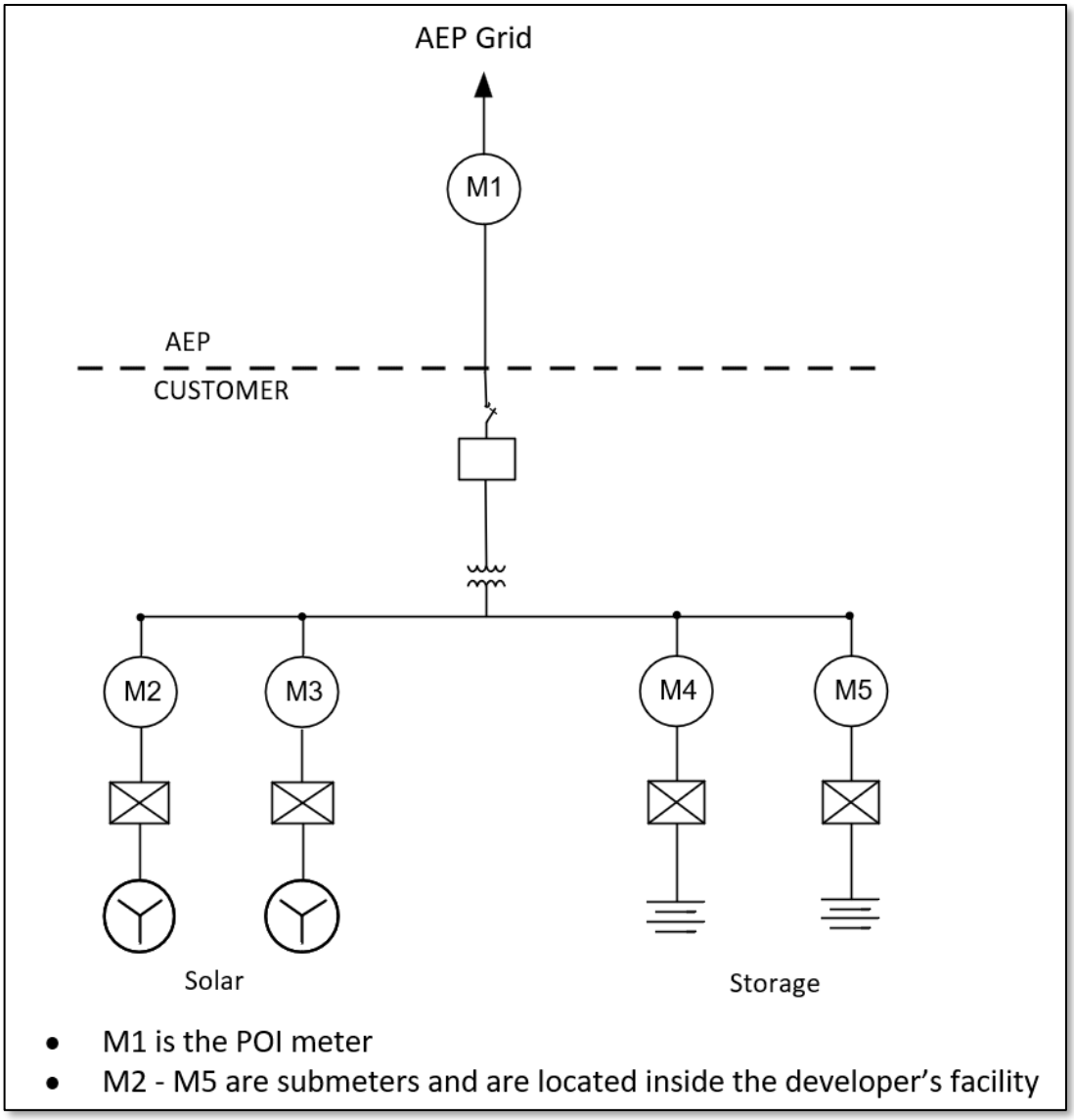

Figure 12: Multiple Generators with One or Multiple Owner(s) Co-Generating Behind a Single POI

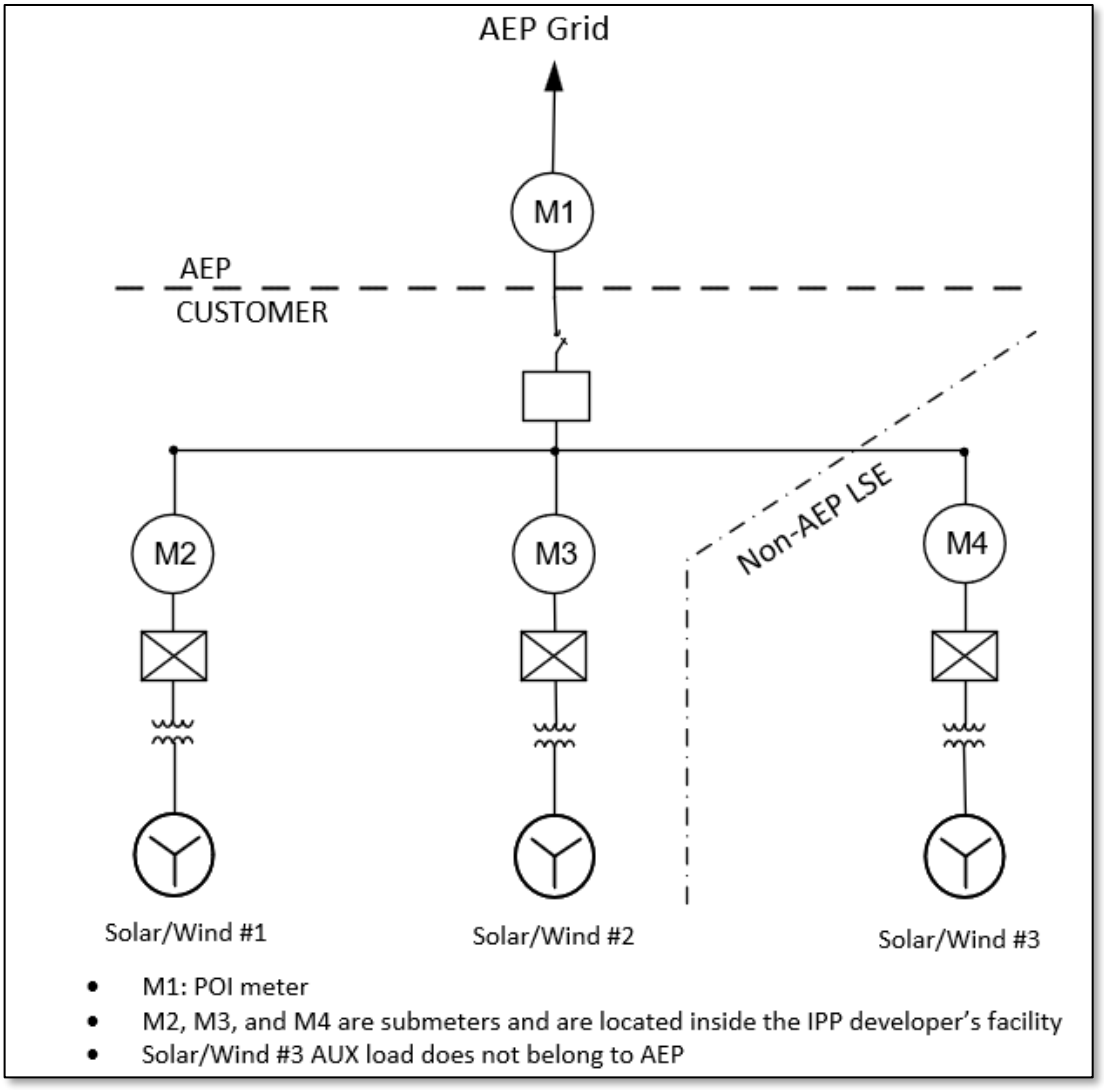

Figure 13: Multiple Generators with One or Multiple Owner(s) Co-Generating Behind a Single POI where One of the IPP's AUX Load Is Served by a Non-AEP LSE

Ownership and responsibilities for the separate metering (AUX, Submeter, and WSL) located inside the IPP developer's facility:

- **ERCOT EPS**

  In general, AEP will procure, own the WSL meters, and meter communication equipment (ethernet SW and Router) inside the developer's facility. The IPP developer will need to procure, own, and install the WSL metering CT and VT. The metering CT and VT specs need to meet AEP's metering standards (refer to section 4.6.4 for more information) and must be approved by AEP. Before construction phase there needs to be discussion and coordination between AEP and the IPP developer on the engineering, designing, procuring, and construction for the WSL metering. AEP needs to approve WSL metering design before construction. For the project in AEP's WEST footprint, please consult Transmission Meter Project Engineering.

- **Non-ERCOT EPS (PJM and SPP)**

  In general, AEP will procure and own the submeters or AUX meter(s) and the meter communication equipment (ethernet SW and Router) inside the developer's facility. The IPP developer will need to procure, own, and install the metering CT and VT for the submeters or AUX meters. The metering CT and VT specs need to meet AEP's metering standards (refer to section 4.6.4 for more information) and must be approved by AEP. Before the construction phase, there needs to be discussion and coordination between AEP and the IPP developer on Engineering, Designing, Procuring, and Construction for the submetering and/or AUX metering. During the detailed scoping phase, there needs to be discussion and coordination between AEP and the IPP developer on the Engineering, Designing, Procuring, and Construction.

  If an existing IPP were to propose an uprate behind the same POI, then submetering requirements will be addressed on a case-by-case basis.

  For projects in AEP's PJM footprint, refer to PCE Standards Metering, and for the SPP footprint, refer to Transmission Meter Project Engineering.

- **DER/Behind-the-Meter Generation Requester (End-User Customers):**

  AEP will determine the appropriate site-specific DER/BTMG Facility revenue metering requirements as part of the DER/BTMG interconnection process for retail or wholesale (municipality cooperative, and so on.) EUCs. If an existing customer proposes a DER/BTMG, then the existing metering CT and VT will need to be evaluated to make sure that the existing metering CT and VT can accurately capture the customer's load scenarios (light load, peak load, and normal load when the DER/BTMG facility is generating at full capacity). If it is determined that the existing metering CT or VT is less accurate than 0.15%, then the metering CT or VT will need to be upgraded and paid for by the EUC. Refer to section 4.6.4 for more information regarding CT and VT accuracy requirements. In some cases, the POI revenue meter may also need to be upgraded to meet AEP's present day meter standard.

  An additional review of the above would be applicable if the DER/BTMG is participating in the markets of the RTE. For other special circumstances, AEP reserves the right to review on a case-by-case basis.

  Multiple questions will need to be addressed or answered by the Customer to determine the required metering configuration, including:

  - What do the state tariffs require?
  - What do the Regional Transmission Organizations' (RTOs) tariffs require?
  - Will the DER/BTMG be providing any type of retail, wholesale, or market services?
  - What are the telemetry requirements by the RTO and other stakeholders?
  - What are the technical characteristics, such as size, of the DER/BTMG Facility?
  - What are the characteristics of the system where the DER/BTMG proposes to connect?
  - How much is the DER/BTMG planning to generate behind the meter?
  - What is the customer's current peak and light load in MW before any generation behind the meter?
  - When the DER/BTMG is generating behind the meter, what is the net peak and light load in MW?

- Is the Customer requesting a net metering arrangement in place of increasing their Transmission service agreement, and if so, can the Customer prove ability to instantaneously disconnect that portion of their load for loss of their DER/BTMG?

4.6.4 Instrument Transformers

4.6.4.0 230 kV and Below

Separate, free-standing, oil-filled, wire-wound Current Transformer (CT) units with high accuracy (0.15SB1.8) and extended range are the standard instrument transformer. In addition, the CT shall have a high extended range of accuracy within the 0.15% parallelogram (as defined in C57.13/ C57.13.6) or better for the entire range of the expected load of the circuit being metered.

- Separate, free-standing, oil-filled, wire-wound Voltage Transformer (VT) units with high accuracy (0.15% through Y or better) are the standard instrument transformers.
- High accuracy (0.15%) Combination CT/VT units (combo) can be applied where space constraints or ease of application require their use. In addition, the CT shall have a high extended range of accuracy within the 0.15% parallelogram (as defined in C57.13/ C57.13.6) or better for the entire range of the expected load of the circuit being metered.
- An exception is made for voltages 34.5 kV and below where solid insulated instrument transformers with high accuracy (0.15%) can be applied.
- Bushing Current Transformers (BCT) are not allowed.

4.6.4.1 IPP Applications 345 kV and Above

4.6.4.1.1 PJM and SPP

- At 345 kV, separate, free-standing, oil-filled, wire-wound CT units with high accuracy (0.15SB1.8) and extended range have been selected as the standard instrument transformer. In addition, the CT shall have a high extended range of accuracy within the 0.15% parallelogram (as defined in C57.13/C57.13.6) or better for the entire range of the expected load of the circuit being metered. The CT ratio shall be specified to transform an acceptable range of secondary current to produce registration on the energy meters. For Requester facilities with generation, the CT shall be sized considering the following factors: maximum generation output, future uprate, and minimum back feed auxiliary power.
- At 500 kV - 765 kV, metering accuracy BCT will need to be used due to historical performance and maintenance issues. As technology advances for these EHV devices, changes in this practice will be evaluated. These installations typically require additional metering in the IPP plant to capture AUX load centers that cannot be accurately registered by the POI meter.

- **Reason:** IPPs have a high output of power but when not generating. IPPs have a very low load and extended range CT have guaranteed meter accuracy down to 0.05% of rating (or better). Metering accuracy BCT are only guaranteed down to 5% of rating. Given that a BCT needs to be used at 500 kV–765 kV, more scrutiny of the back-feed and auxiliary load centers will be required so that we can accurately engineer and scope the metering systems.
- High accuracy (0.15%) Capacitive Voltage Transformer (CVT) can be used.

4.6.4.1.2 ERCOT EPS

- Same as PJM CT criteria for IPP 345 kV and above.
- Separate, free-standing, oil-filled, wire-wound VT units with high accuracy (0.15% through Y or better) have been selected as the standard instrument transformers (see reason below).

  Reason: CVT are not recommended on ERCOT EPS applications due to a requirement to accuracy test the CVT every five years. To avoid unnecessary outages, AEP will not use CVT for this application. Meter points in ERCOT that are non-EPS can use high accuracy (0.15%) CVT.

4.6.4.2 Non-IPP Applications 345 kV and Above

4.6.4.2.1 PJM and SPP

- High accuracy (0.15S-B1.8) BCT Metering accuracy (0.15S-B1.8) BCT can be used if it meets light load accuracy requirements.

Note: Review of light load accuracy capability required. At 345 kV, free-standing CT units can be used if the BCT does not meet accuracy requirement. 500-765 kV systems will be evaluated on a case-by-case basis.

- High-accuracy (0.15%) CVT

4.6.4.2.2 ERCOT EPS

- Separate, free-standing, oil-filled, wire-wound high accuracy (0.15S-B1.8) CT units are the standard instrument transformers. In addition, the CT shall have a high extended range of accuracy within the 0.15% parallelogram (as defined in C57.13/ C57.13.6) or better for the entire range of the expected load of the circuit being metered.
- Separate, free-standing, oil-filled, wire-wound VT units with high accuracy (0.15% through Y or better) are the standard instrument transformers.

  Reason: CVT are not recommended on ERCOT EPS applications due to a requirement to accuracy test the CVT every five years. In order to avoid unnecessary outages, AEP will not use CVT for this application. Meter points in ERCOT that are non-EPS can use 0.15% high accuracy CVT.

4.6.5 Voltage Transformer Ratio

The voltage transformer ratio must be specified with a ratio to provide a nominal of 120 volts at the meter.

4.6.6 Polarity

If AEP owns the meter and is responsible for settlement, then the polarity marking (designated as H1) on the primary side of the instrument transformer must be oriented toward AEP. See

Figure 14. The CT secondary terminal designated as X1 is to be connected to the positive current terminals of the energy meter (assuming VT is connected properly). Current flow in H1 (from AEP) and out H2 (to Requester), will register positive MWh (delivered) by the energy meter.

Conversely, for reverse power flow from the interconnecting Requester to AEP (in H2), negative MWh (received) will be registered on an independent register of the energy meter if AEP owns the meter and is responsible for settlement. Note the orientation of the VT primary connection, which is shown between the meter owner, AEP, and the CT. The VT orientation is AEP's practice where it can be done physically so that the meter does not register VT losses.

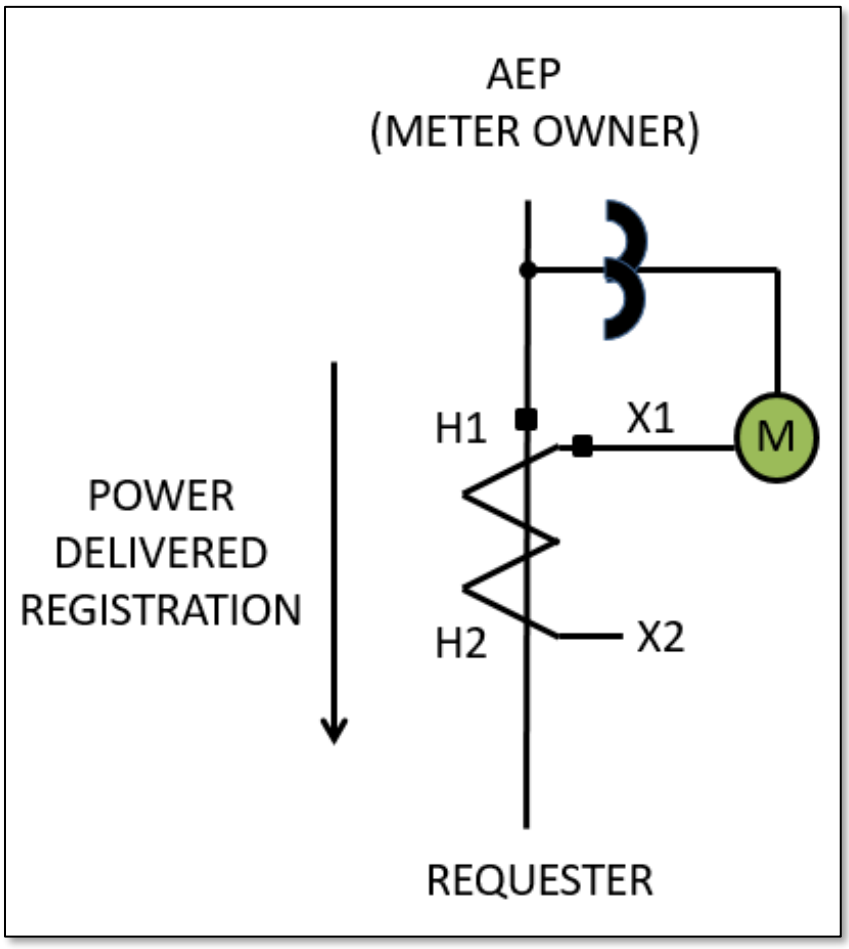

Figure 14: CT Polarity and VT Connection

4.6.7 Meter Requirements

4.6.7.0 Revenue Meter

The revenue meter accuracy must follow the applicable RTE criteria for where it is installed and must be capable of MV90 remote readings.

4.6.7.1 Requester Access to AEP Metering Circuits

- The revenue meter must be the only device connected to the metering accuracy instrument transformers.

Note: There are exceptions where unused secondary windings of the voltage source for applications at 345 kV and above can be used in AEP protection relay devices. However, there must be no RTE restrictions for such a case.

4.6.8 Data Acquisition

4.6.8.0 AEP Access to Real-time Meter Data

- If an AEP RTU is present: It will poll the meters.
- If an AEP RTU is not present The AEP SCADA system can poll the meters directly when AEP Settlements needs Real-time data.

The SCADA RTU design dictates which options (Ethernet or RS-485 serial) are chosen for the meters. An AEP-owned local area network (LAN) connection is preferred for AEP-owned meters. Refer to *SS-500000 Interconnected Facilities SCADA Guide,* and *SS-490100*, *Station Revenue Energy Meter Communication Options* for directions on the data communications interface.

4.6.8.1 Requester Access to Real-time Meter Data

- If the Requester needs Real-time data from the meter: The connection provided will depend on the SCADA system design.
- If an AEP RTU polls the meters: AEP may grant the Requester serial access to the AEP RTU.
- If an AEP RTU is not present: AEP may grant the Requester serial access to the meters.

Note: Refer to SS-500000 Interconnected Facilities SCADA Guide, and to SS-490100, Station Revenue Energy Meter Communication Options for directions on the data communications interface.

4.6.9 MV90 Interval Data Retrieval

The AEP Transmission System Load Management (Settlements) or Load Research group will use the AEP MV90 data translation system to interrogate AEP-owned revenue energy meters (primary and backup).

- If the Ethernet is connected to the SCADA wide area network (WAN), MV90 can interrogate the meter's Ethernet port.
- If the meter's Ethernet port is not connected to the transmission system network, it will be polled using a cellular Internet Protocol-based connection.
- If the Requester needs meter interval data retrieval, then a meter serial port can be used, or AEP can provide an internet proxy.

4.6.10 Metering Equipment Maintenance and Testing

- Unless otherwise specified, the energy meters must be inspected and tested in accordance with the latest applicable American National Standards Institute (ANSI) Standards upon installation. The test cycle will vary, depending on region. Refer to the *Field Service Testing Guideline*[1] for AEP-owned meters. If the Requester needs additional testing other than the normal test cycle, and the meter is found to be within the established tolerances, this additional testing will be performed at the GC, TI, or EUC Requester's expense.
- The accuracy of each device in the metering package must be maintained according to the RTE criteria where the meter is installed. The meter test requires the use of a meter standard with accuracy traceable to the National Institute of Standards and Technology (NIST).
- If the metering equipment fails to operate, the energy registration will be determined from the best data available, including backup metering, check metering, or historical metering data.
- The RTE error disclosure criteria must be followed if any test of the metering equipment meets that error criteria. The account between the parties for service before delivery must be adjusted to correct for the inaccuracy. The adjustments will be made according to the applicable regional market guidelines.
- Instrument transformers must be inspected and maintained in accordance with good utility practice. AEP-owned ITs must be inspected and maintained based on existing AEP Station practices and standards.
- The party that owns the metering equipment must maintain records that demonstrate compliance with all meter tests and maintenance conducted in accordance with good utility practice for the life of the interconnection point. The other party must have reasonable access to the records.
- When AEP-owned metering equipment is physically installed inside of a customer's property, then AEP requires full access to the metering within a timeframe that allows AEP to meet RTO and AEP Settlements' requirements.

[1] AEP Real-time Operations, Field Service Testing Guideline, EDOPS.01.163.00_GUI, Rev. 1.0, 6/30/2023

4.7 Telecommunications Facilities Requirements

4.7.1 Fiber-Optic Cable Requirements

The Requester's Interconnection Agreement with AEP will identify requirements for fiber-optic cable installation between Requester and AEP facilities. The agreement could include a requirement for the Requester to install redundant and diversely routed fiber-optic cables. AEP PCE prefers direct fiber relaying rather than fiber optic multiplexers. In addition to using the fiber-optic cable for relaying, supplemental AEP network and serial data connections can be used in the system interconnection design.

AEP will determine the minimum fiber count requirements.

The Requester must not terminate or route fiber-optic cable with metallic members at or through the Requester's substation control building or the telephone company demarcation. Fiber-optic cable with metallic members includes, but is not limited to, optical ground wire (OPGW), fiber-optic cable with an integral trace wire, and metallic-armored fiber optic cable.

Fiber-optic cable with metallic members must be transitioned to all-dielectric fiber-optic cable. AEP must approve fiber-optic cable before it enters the Requester's control building or the telephone company interface.

4.7.2 Demarcation Requirements

AEP and the local exchange carrier (LEC) must approve all demarcation equipment (demarcation or telephone company interface box) for all telephone company circuits that are leased to a Requester-owned substation. The Requester will install, own, and maintain this equipment.

If communication is provided by way of satellite, the demarcation equipment shall include the satellite antenna, satellite modem, and all cabling necessary to extend the connection to the AEP Equipment. Installation shall ensure adequate outdoor clearances to maintain an unobstructed line of sight to the in-orbit satellite.

If communication is provided by way of cellular, the demarcation point shall include sufficient space to mount cellular antennas externally to the control building to achieve adequate communication performance. This installation may require a mast or pole affixed to the building or located within the substation's fenced area.

The demarcation must house all telephone company circuit termination equipment at the substation, including, but not limited to, the network interface and high-voltage protection (HVP) equipment (see section 4.7.3). The demarcation must provide the interface between the telephone company's service cable and the substation. The Requester must provide 120 VAC power to the demarcation sourced from an appropriately sized DC/AC inverter in the substation control building. The DC/AC inverter must be powered from a dedicated substation DC breaker sourced from a minimum 8-hour substation battery.

If the demarcation is located in a position that makes it impractical to power from the station battery, the Requester must have another way to provide 120 VAC service to the demarcation. AEP must approve this arrangement. The demarcation design will include provisions to extend the leased circuit into the substation control house or other enclosure where AEP equipment will be placed. The demarcation must be located on the substation ground grid, unless HVP requirements

cause it to be placed elsewhere. The demarcation must be accessible outside the substation fence or through a secured personnel gate or door.

Telephone company personnel will not have access to the control building housing an AEP RTU. Demarcation design must include access at all times for AEP personnel without escort from the Requester, telephone company personnel, facility operator, or landowners. Before demarcation construction begins, the Requester must submit its design to AEP for review and approval. The design must include physical locations of the telephone company's service cable, substation ground grid, demarcation mounting structure, substation fence, and substation control building. Demarcation design covered in this section must be operational, and AEP must commission the design before the interconnection facility is placed in-service.

4.7.3 High Voltage Isolation Requirements

The demarcation must meet all high-voltage protection (HVP) requirements according to the LEC as follows:

- LEC Service - All-dielectric fiber-optic service cable
  - AEP must approve cable design and implementation.
  - The Requester will work with the telephone company to install, own, and maintain all-dielectric fiber service cable to the demarcation location of the Requester-owned substation ground grid.
  - Armored fiber-optic cable must not be installed within the ground potential rise (GPR) high voltage zone of influence.
  - The telephone company must transition armored fiber-optic cables to all dielectric fiber-optic cable outside the GPR high voltage zone of influence. This all-dielectric, fiber-optic service cable must extend from a location at or beyond the 300-volt point, through the GPR high voltage zone of influence, to the demarcation.
  - Telephone company personnel must have access at all times to the all-dielectric fiber-optic service design without escort from AEP personnel, Requester personnel, facility operator, or landowners.
- LEC Service - HVP equipment with copper service cable
  - AEP and the telephone company must approve the equipment.
  - The Requester or local telephone provider must install and maintain equipment.
  - AEP will have no responsibility for maintaining any part of the telephone company demarcation or equipment.
  - Copper isolation equipment must be located on the substation ground grid, unless the LEC has different requirements.
  - Equipment design must include adequate protection against GPR.
  - Equipment installation is required on all telephone company circuits delivered over copper cable to the substation demarcation in compliance with LEC requirements.
  - Access to equipment is required outside the substation fence or through a secured personnel gate or door.

4.7.4 Circuit Requirements

AEP may assign the Requester responsibility for communication circuits that AEP will use. In such cases, the Requester will be responsible for confirming project-specific circuit requirements and obtaining specific AEP addresses and AEP contact names in preparation for issuing communication circuit orders with AEP. Circuits will be multi-protocol label switching (MPLS) with AT&T, Verizon, or an alternative satisfactory to AEP. The Requester will place circuit orders to AEP specifications with appropriate required inter-company documentation between AEP and Requester. These communications will be paid for, owned, installed, and maintained by the Requester.

The Requester must provide AEP and the telecommunication service provider advance authorization for communication circuit maintenance. AEP and any of its Affiliates or subsidiaries can monitor the circuit, report trouble, and take corrective action with the telecommunication service provider, at the Requester's expense, to maintain circuit reliability. This requirement applies to all leased Requester circuits.

Additionally, to ensure grid reliability, a backup Interpersonal Communication capability may be required, in some cases, between AEP Control Centers and the personnel responsible for operating the Requester's facilities. Such a capability would be used in the event that the normal means of Interpersonal Communication become unavailable, such as a large-scale interruption of the public switched telephone network. If AEP determines such a backup Interpersonal Communication capability is necessary for a particular facility, the Requester will be required to procure services and/or equipment compatible with AEP's backup Interpersonal Communication systems. The communications facilities described below will be paid for, owned, installed, and maintained by Requester:

1. Satellite phones are satisfactory to TSP to serve as backup voice communication facilities. Generator's satellite phone shall be required if the total plant generation capacity is equal to or greater than 50 MW, or if the plant is identified by RTE as a Blackstart resource.
2. Requester's satellite phone shall:
    - Be powered on at all times and capable of receiving instructional and test calls from the TSP dispatch office (following the start of a blackout condition on the RTE grid, the Generator's satellite phone shall be powered on continuously for seven calendar days without external power from the RTE grid while capable of receiving such calls)
    - Be located such that the plant operator can receive and confirm verbal instructions from the TSP dispatch office
    - Be compatible with the RTE's satellite phone system
    - Be capable of participation in group calls
    - Include associated interface equipment (such as antenna and cable, if applicable) at the location of the Plant operator
3. TSP reserves the right to identify exclusions to the backup voice communication facilities requirement and to eliminate such requirement in whole.

4.7.5 Polled Device Connectivity Requirements

If the Requester's facilities include multiple locations with meter panels, RTUs, or other devices to be polled by AEP under a single Interconnection Agreement, then the Requester shall provide AEP with the following, satisfactory to AEP (design is subject to AEP's review and approval):

- Control building space inside the Requester's substation for AEP's telecommunications network equipment and associated equipment; such control building space shall be included in the access plan identified in section 4.1.1.
- Fiber connectivity (that is, fiber optic cable including associated termination equipment) between the control building space allocated for AEP's telecommunications network equipment and each location of meter panels, RTUs, or other devices to be polled by AEP.

Requester shall engineer, procure, construct, pay for, own, maintain, and replace as necessary, the fiber optic cable and associated termination equipment.

For an interconnection involving one Requester substation and one generation tie-line under a single Interconnection Agreement, the control building space identified shall be located in the Requester's substation.

If the Requester has multiple Requester substations sharing one generation tie-line under a single Interconnection Agreement, control building space shall be located in the Requester's substation to which the generation tie-line connects.

If multiple generation tie-lines were to connect into a single Requester substation under a single Interconnection Agreement, only one instance of control building space would be needed.

4.8 Station Service

4.8.1 AC Station Service System

AC station service power systems in AEP and Requester substations must be independent and derived separately. AEP must approve the AC station service system's design and construction that serves AEP equipment when AEP facilities are located in the Requester's substation. The standard station service secondary voltage is center-tapped 120/240 VAC for single-phase or three-phase systems. A three-phase system must use an open-delta or closed-delta secondary only. For service power serving AEP facilities AC station service systems must comply with *AEP Standard SS-010000 Service Power for Electrical Stations Design Guide* and *SS-010090 AC/DC Panelboard and AC Station Service Switchboard Specification for Substations.*

4.8.2 DC Station Service System

The standard AEP battery voltage for new installations is 125 VDC. Each substation must have a properly sized battery and charger to carry the DC station loads during an AC power failure. Where the DC station service system is supplying AEP-owned equipment, the DC station service system will not be smaller than the requirements described in *AEP Standard SS-181000 DC Station Service Application Guide*. Requirements outlined in *SS-181000* are based on IEEE-485 calculations.

For equipment combined within a single fenced station, AEP Transmission and AEP-Affiliate owned DC station service power systems shall only serve AEP Transmission and AEP-Affiliate owned and maintained equipment. DC station service power systems serving equipment not owned and maintained by AEP Transmission or AEP-Affiliates shall be independent and separately derived. AEP and Requester-owned equipment located in separate fenced stations must have independent and separately derived DC station service power systems.

4.9 Transmission Line Requirements

4.9.1 Design

Transmission line design and construction begins after the point of connection is determined. When this work is required for new transmission line facilities on the AEP system to connect the Requester's facilities, it must be completed in compliance with:

- *ANSI-C2*, National Electrical Safety Code (NESC), latest edition
- Governmental agencies as needed to obtain permits to construct the line (for example: the U.S. Army Corps of Engineers or the Federal Aviation Administration)
- Additional applicable state and local codes or criteria
- The requirements in Table 14.

In addition, for all transmission line facilities connecting to the AEP system that carry AEP services to more than one customer, or that AEP will own or maintain, the Requester must install, operate, and maintain the facility in conformance with generally accepted utility practice and must comply with the applicable National Electrical Code, National Electrical Safety Code, local codes, Regional Transmission Entity (RTE) requirements, and North American Electric Reliability Corporation (NERC) Reliability Standards. These facilities must also comply with the design requirements in Table 15.

At transmission line crossings, unless otherwise specified, AEP-owned networked transmission line facilities will cross above dedicated radial facilities connecting a developer's project to the transmission grid regardless of the relative line voltages. The AEP transmission facility's ampacity rating shall not be impacted, including seasonal and operational ratings flexibility with respect to Ambient Adjusted Ratings (AAR). Any costs required to raise an AEP transmission line to resulting from the crossing will be the responsibility of the Requester.

Table 14: Requirements for All Lines Connected to the AEP Transmission System

Parameters	**Requirements (All Voltages Unless Otherwise Specified)**
Extreme Wind Loading	For lines less than 500 kV or structures less than 225 feet tall, use ASCE MOP 74-2020 for the 100-year Mean Return Interval (MRI) load as appropriate for the line's location. Lines of 500 kV or higher or structures taller than 225 feet, use the 300-year MRI load. Exposure C as a minimum shall be used. Exposure B shall not be used.
Heavy Ice Load (No Wind)	• Heavy Ice Load Case for AEP Heavy = 1.25" ice at 0°F with 0 mph wind • Heavy Ice Load Case for AEP Medium = 0.75" ice at 0°F with 0 mph wind • Refer to Figure 15 for AEP Medium and Heavy Load zones in the AEP Western footprint. The AEP Eastern footprint is all in the AEP Heavy Load zone.
Ice with Concurrent Wind	Use ASCE MOP 74-2020 for the 100-year Mean Return Interval (MRI) load as appropriate for the line's location.
Unbalanced Loads	Tangent and Running Angle Structures will be designed for the following loads: • Broken Phase (single conductor) - 70 mph wind with 0" ice at 0°F • Broken Phase (two or more bundled conductors) - 0 psf wind with 0" ice at 60°F • Broken Ground Wire - 70 mph wind with ice at 0°F • Unbalanced Ice (Iced span) - 50 mph wind with 0.5" ice at 0°F

<table>
<tr><th>Parameters</th><th>Requirements (All Voltages Unless Otherwise Specified)</th></tr>
<tr><td></td><td>Unbalanced Ice (Bare span) - 50 mph wind with 0” ice at 0°F
Use ASCE MOP 74 to calculate the wind pressures associated from the wind speeds specified above.</td></tr>
<tr><td></td><td>Notes:
For all longitudinal load cases, the design load shall be calculated by determining the greatest mechanical load resulting from breaking, removing, or unbalanced ice in the fore span, back span, or tap span. For 138 kV lines and below, dead-end structures may be installed at least every five miles in lieu of designing for the broken phase, broken ground wire, and unbalance ice loads.
For vertically bundled conductors without spacers, use the single conductor load case for one sub-conductor for the broken phase loading.</td></tr>
<tr><td>NESC Load Requirements</td><td>All NESC Load requirements, 250B, 250C, and 250C for Grade B construction will be met.</td></tr>
<tr><td>OPGW (Optical Ground Wire) Standards</td><td>OPGW will comply with AEP Standard OPGW Requirements in Table 17 or equivalent.</td></tr>
<tr><td>Static Ground Wire Standards</td><td>Static wire needs will be determined by available fault current on the line. All static wire shall be aluminum-clad steel or ACSR conductor. 7-#8 is the minimum size that shall be used.</td></tr>
<tr><td>Damper Requirements</td><td>Aeolian vibration dampers are required unless an engineering study indicates otherwise or twisted-pair conductor is being used.</td></tr>
<tr><td>Galloping Assumptions</td><td>Galloping will be considered for all lines in Indiana, Michigan, western Ohio, Oklahoma, and Texas (except for the SWEPCO area in northeast Texas). In areas not mentioned above, galloping need not be considered unless local knowledge indicates otherwise.</td></tr>
<tr><td>Galloping</td><td>For all spans with conductor size smaller than 1,272 kcm ACSR, apply the Cigre Ellipse with a 0.5 amplitude factor. For all spans with conductor equal to or greater than 1,272 kcm ACSR, apply the Cigre Ellipse with a 0.7 amplitude factor. The ellipses must have the separation shown in the table below plus the bundle spacing if the line uses bundled conductor. The use of twisted-pair conductor or other mitigation devices is allowed to mitigate galloping.
<table>
<tr><th></th><th>≤69 kV</th><th>138 kV</th><th>161 kV</th><th>230 kV</th><th>345 kV</th><th>500 kV</th><th>765 kV</th></tr>
<tr><td>Phase-Phase (ft)</td><td>1.5</td><td>2.0</td><td>2.5</td><td>3.0</td><td>4.0</td><td>6.5</td><td>8.5</td></tr>
<tr><td>Phase-Ground (ft)</td><td>1.0</td><td>1.5</td><td>2.0</td><td>2.5</td><td>3.0</td><td>4.5</td><td>6.5</td></tr>
</table></td></tr>
<tr><td>Spacers</td><td>The use of spacers in 2-conductor horizontal bundles or bundles of more than 2 conductors is required. Spacer-dampers are allowed.</td></tr>
<tr><td>Min. Design Clearance</td><td>All as-built facilities will comply with NESC Clearance Requirements.</td></tr>
</table>

<table>
<tr><th>Parameters</th><th>Requirements (All Voltages Unless Otherwise Specified)</th></tr>
<tr><td>Min. Insulation Leakage Distance</td><td>
<table>
<tr><th><69 kV</th><th>138 kV</th><th>161 kV</th><th>230 kV</th><th>345 kV</th><th>500 kV</th><th>765 kV</th></tr>
<tr><td>49″
68″
84″</td><td>98″
136″
168″</td><td>115″
159″
197″</td><td>163″
227″
281″</td><td>245″
340″
421″</td><td>355″</td><td>543″</td></tr>
</table>
Note: The three values shown are for Normal, Heavy, and Very Heavy Contamination according to the latest International Electrotechnical Commission (IEC) recommendations. For 500 kV and 765 kV lines in heavy or very heavy contamination areas, consult AEP Transmission Line Standards.
</td></tr>
<tr><td>Min. Critical Impulse Flashover Voltage</td><td>
<table>
<tr><th><69 kV</th><th>138 kV</th><th>161 kV</th><th>230 kV</th><th>345 kV</th><th>500 kV</th><th>765 kV</th></tr>
<tr><td>628 kV</td><td>760 kV</td><td>930 kV</td><td>1,105 kV</td><td>1,585 kV</td><td>2,065 kV</td><td>-2,685 kV middle phase
-2,530 kV outside phase</td></tr>
</table>
</td></tr>
<tr><td>Max. Structure Ground Resistance</td><td>
<table>
<tr><th><69 kV</th><th>138 kV</th><th>161 kV</th><th>230 kV</th><th>345 kV</th><th>500 kV</th><th>765 kV</th></tr>
<tr><td>20 Ω</td><td>20 Ω</td><td>20 Ω</td><td>20 Ω</td><td>20 Ω</td><td>20 Ω</td><td>20 Ω</td></tr>
</table>
</td></tr>
<tr><td>Max. Shielding Angle</td><td>
<table>
<tr><th><69 kV</th><th>138 kV</th><th>161 kV</th><th>230 kV</th><th>345 kV</th><th>500 kV</th><th>765 kV</th></tr>
<tr><td>30°</td><td>30°</td><td>30°</td><td>15°</td><td>15°</td><td>15°</td><td>5°</td></tr>
</table>
</td></tr>
<tr><td>EMF Limits</td><td>Must comply with all applicable local, state, and federal regulations.</td></tr>
</table>

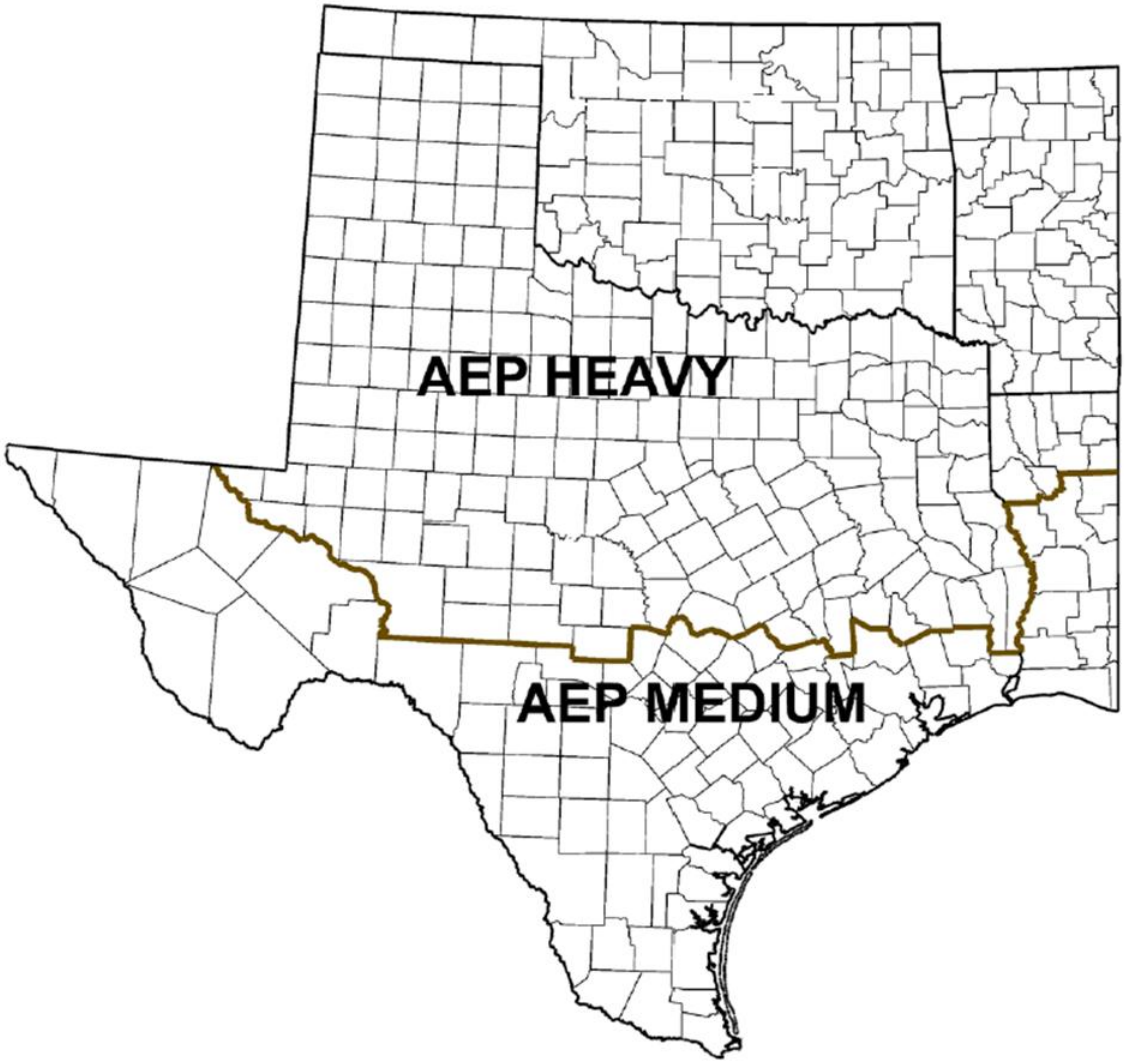

Figure 15: AEP Loading Map for Heavy Ice Load

Table 15: Additional Requirements for Lines Connecting to the AEP Transmission System

Parameters	**Requirements (All Voltages Unless Otherwise Specified)**
Conductor Sizes for New Construction	For AEP-owned or maintained lines, the conductor will be chosen from the *AEP Standard Conductor Table* (Table 16). The conductor for non-AEP owned or maintained lines shall be in the Interconnect Agreement.
Min. Right-of-Way (ROW) Width	Minimum ROW widths on AEP-owned or maintained lines must be calculated based on a minimum requirement of the NESC horizontal clearance requirements to buildings with the conductor displaced by a 6 psf wind at 60°F and at rest.
Provisions for Live Line Maintenance	For AEP-owned or maintained lines, the Minimum Approach Distance according to Occupational Safety and Health Administration (OSHA) regulations for live line work and climbing inspections will be provided.

Table 16: AEP Standard Conductor Table

Size (CM) and Code Name	Stranding	Type	Type
69 kV Lines			
1-477,000 - Hawk	26/7	ACSR	ACSS
1-556,500 - Dove **Note:** Preferred conductor for rural construction.	26/7	ACSR	ACSS
1-795,000 - Drake **Note:** Preferred conductor for urban construction.	26/7	ACSR	ACSS
1-954,000 - Cardinal	54/7	ACSR	ACSS
1-1,033,500 - Curlew	54/7	ACSR	ACSS
138 kV and 161 kV Lines			
1-556,500 - Dove	26/7	ACSR	ACSS
1-795,000 - Drake **Note:** Preferred conductor for urban construction.	26/7	ACSR	ACSS
1-1,033,500 - Curlew **Note:** Preferred conductor for rural construction.	54/7	ACSR	ACSS
1-1,272,000 - Pheasant	54/19	ACSR	ACSS
1-1,590,000 - Falcon	54/19	ACSR	ACSS
230 kV Lines **Note:** There is no distinction between rural and urban for preferred conductor for 230 kV and 345 kV.			
1-1,033,500 - Curlew	54/7	ACSR	ACSS

Size (CM) and Code Name	Stranding	Type	Type
1-1,272,000 - Pheasant	54/19	ACSR	ACSS
1-1,590,000 - Falcon	54/19	ACSR	ACSS
2-795,000 - Drake	26/7	ACSR	ACSS
345 kV Lines **Note:** There is no distinction between rural and urban for preferred conductor for 230 kV and 345 kV.			
2-954,000 - Cardinal	54/7	ACSR	ACSS
2-1,272,000 - Pheasant	54/19	ACSR	ACSS
2-1,590,000 - Falcon	54/19	ACSR	ACSS

Table 17: OPGW Design and Fiber Requirements

Requirement	Minimum	Maximum
OPGW "Mechanical" Design Parameters **Note:** As used herein, OPGW is an abbreviation for Composite, Single-Mode, Optical Fiber Ground Wires for Overhead Use.		
Overall Diameter **Note:** The OPGW overall diameter shown is the preferred value so that the associated hardware may be interchangeable. If the specific OPGW being designed, with varying numbers of optical fibers and fault current requirements, requires overall diameters larger than shown, the vendor may quote the larger diameter. In general, within the context of the other OPGW requirements, it is preferred to try to minimize overall diameters.	0.646 inch (16.4 mm)	
Rated Breaking Strength **Notes:** • The OPGW shall be designed such that, for tensile loads up to 95% of its rated breaking strength (RBS), the optical fibers shall not be damaged and their optical transmission characteristics shall not be affected. • If the OPGW is designed such that at a tension equal to 95% of the RBS the optical fibers are subjected to strain, the tension in the OPGW from a 1.25" Radial Ice Load at 0ºF with No Wind shall not	17,000 lbs. (75.6 kN) or 25,500 lbs. (113.4 kN)	

Requirement	Minimum	Maximum
exceed 60% RBS (for example: 60% of 25,500 lbs.) • If the OPGW is designed such that at a tension equal to 95% of the RBS the optical fibers are subjected to no strain, the tension in the OPGW from a 1.25" Radial Ice Load at 0ºF with No Wind shall not exceed 90% RBS (for example: 90% of 17,000 lbs.). • The RBS of the OPGW shall not exceed the rated strength of the component strands times a strength reduction factor of 0.90. The minimum RBS requirements are for the preferred OPGW diameter. Actual minimum RBS requirements may need to be higher depending on the specific overall diameters and bare weights of each type of OPGW having varying numbers of optical fibers included.		
Diameter or Smallest Dimension of Metal Strands:		
Outside Layer **Note:** The outer layer of strands on the OPGW is to consist only of aluminum-clad steel wires with the minimum diameter specified and is to be Left-hand Lay.		
Aluminum-Clad Steel Wires (per ASTM B415)	0.1285 inch (3.25 mm)	
Inner Layers		
Aluminum-Clad Steel Wires (per ASTM B415)	0.100 inch (2.5 mm)	
Aluminum 6201-T81 Alloy Wires (per ASTM B398)	0.100 inch (2.5 mm)	
Aluminum Wire 1350-H19 (per ASTM B230)	0.100 inch (2.5 mm)	
Fault Current Capability, I squared × T **Note:** The required Fault Current Capability, I squared × T, is based upon an OPGW ambient reference temperature of 40ºC (104°F) and a fault duration of 0.25 seconds.	140 (kiloamps) squared × seconds or as specified in RFQ	
Continuous (RMS) Current	Zero (0) or as specified in RFQ	
Single Mode Fiber Requirements **Note:** Single Mode Fibers are to be Corning Specification SMF-28 (latest revision) or the comparable Lucent specification. The use of fibers from other suppliers must be approved in advance by AEP. All optical fibers supplied as part of any one Purchase Order for OPGW shall be supplied from a single source.		
Optical Attenuation		

Requirement	Minimum	Maximum
@ Wavelength = 1310 nanometers (nm)		0.36 dB/km
@ Wavelength = 1550 nanometers (nm)		0.25 dB/km
Total Chromatic Dispersion **Note:** Maximum attenuation and total chromatic dispersion values apply to each fiber within the OPGW for each reel.		
@ 1285 - 1330 nm, (ps/nm - km)		3.5
@ 1530 - 1570 nm, (ps/nm - km)		17.0
Core to Cladding Concentricity Error		1.0 µm
Core Diameter		9.0 µm
Cut-Off Wavelength @ 1310 nm	1130 nm	1270 nm
Typical Unspliced OPGW Reel Length	4 miles (21,100 ft.; 6.4 km)	

5.0 Construction

This section outlines the requirements associated with the construction phase of a typical project, including option to build oversight and inspections. Interconnect customers seeking to adjust their executed interconnection agreement scopes need to follow the respective RTE tariff change order processes. Refer to section 2.0 for the RTE websites.

5.1 Option to Build Oversight Requirements

AEP has guidelines specific to the Option to Build (OTB) process. They identify AEP's recommendations, expectations, and requirements for Requesters electing to use the OTB transmission process as part of their generation facilities interconnection. The *Independent Power Producers Option to Build Guidelines* are located on AEP.com in the AEP Transmission Studies and Requirements section on the Required Postings page.

5.2 Inspection Requirements

5.2.1 General Inspections

An interconnection facility must successfully pass all required AEP inspections before it can be energized in order to maintain the safety, reliability, and integrity of the transmission system. The quantity and frequency of inspections will depend on factors such as the type of interconnection, proximity to existing AEP facilities, potential safety concerns associated with existing or proposed facilities, public accessibility, and the specific characteristics of the Requester's project. Any deficiencies identified during inspections may require corrective action and could impact the interconnection completion date.

In addition, the final cut-in outage is contingent upon the AEP substation achieving mechanical completion. Mechanical completion includes the installation of all required station equipment and the completion of construction activities necessary to safely support commissioning, testing, and energization.

5.2.1.0 Protection & Control Inspection

For cut-in outages, an AEP Transmission Representative will retain a construction clearance on the site until the Requester fulfills all of its construction requirements. An AEP Protection & Control (P&C) staff member can retain clearances until all desired and necessary checkouts are completed. AEP reserves the right to inspect all equipment from the point of interconnection to the Requester's first protective fault interrupting device and the ground system. This inspection may include, but is not limited to, circuit breakers, circuit switchers, power fuses, instrument transformers, switches, surge arresters, bushings, and relays and associated equipment including battery, battery chargers, or other customer equipment. The inspection may also include a visual check of all major equipment and an examination of required test results.

5.2.1.1 Pre-Energization Inspection

The Requester and AEP Transmission System Operations personnel must commission and validate the facility before it is declared ready for operation. Validation points are defined in sections 4.5.3, 4.5.4, 4.5.6, and other applicable agreements between AEP and Requesters.

6.0 Operations

The following subsections outline the requirements associated with facility operations, including general requirements, in-service coordination, NERC requirements, meter agent and settlements requirements, and many more.

6.1 General Operating Requirements

This section outlines the general operational requirements for the Requester's connected facilities. AEP's Real-time Operations organization must manage and operate transmission and interconnection facilities based on NERC, regional, and applicable RTE reliability standards and criteria. The Requester is responsible for meeting AEP operational requirements, whether or not their connected facilities are in operation. This requirement applies to any transmission operating condition.

A connected facility **must not**:

- Impact safe electric grid operation.
- Increase the risk of system reliability constraints that stem from facility failures.
- Increase frequency and/or duration of system outage interruptions.
- Prevent effective resource usage to provide efficient and cost-effective service to customers.
- Impact service reliability and capacity to customers.
- Decrease system flexibility associated with day-to-day operations. This includes design and operating considerations associated with adhering to regulatory requirements (federal and state) for Ambient Adjusted Ratings (AAR).

The Requester is solely responsible for proper coordination of its equipment with the transmission system and must provide the most current specifications for interconnection equipment, including drawings and one-line diagrams to AEP for review. AEP's review does not confirm or endorse the design, or as a warranty of safety, durability, or reliability of the facility. The Requester must submit to AEP for review and approval any additional modifications to the specifications for interconnection equipment that could affect AEP Real-time Operations. In certain cases, an operations and

communications protocol will be required to coordinate operation of Requester-operated facilities with AEP Real-time Operations personnel to ensure Requester and AEP facilities are operated within applicable reliability standards.

Any operational services that the Requester expects AEP Real-time Operations to perform for Requester-owned facilities must be fully documented in a supplemental operations agreement. AEP Real-time Operations will not perform studies, monitoring, switching, or any other operational functions unless those functions are explicitly outlined in the supplemental operations agreement. Such an agreement may also require an operations and communications protocol to coordinate operation of Requester-owned facilities in a fashion that meets customer reliability needs and applicable reliability standards. The Real-time Operations *Requirements for Operations Service Agreement or Protocol* outlines the requirements for interconnected entities who own and/or operate transmission facilities and the criteria that would require the creation of an operations agreement and/or operations protocol document.

All interconnecting facilities must be operationally tested and/or inspected in order to meet current requirements as specified in section 5.2.

Before the facility is declared ready for operation, the Requester must provide AEP with the name, title, address, telephone number, and email address of individuals who will operate the facility. The Requester must keep AEP informed regarding contact changes in time and maintain proper communication channels between AEP and the Requester. The Requester must always have valid contacts for operational issues.

6.2 Advanced In-Service Coordination

The Requester must provide the AEP project manager and the TDC coordinator (Real-time Operations) an advanced written notice of their GC, TI, or EUC facility in-service date. The greater of 45 calendar days or any RTE in-service date notification requirements will be used as the advanced written notice time constraint. AEP Real-time Operations will use this time period to ensure that telemetry, system models, communication, and procedures of all stakeholders are verified.

6.3 Transmission Service and NERC Registration

All entities required to register under NERC's Rules of Procedure, Appendix 5A must provide AEP with this NERC registration information at least 30 calendar days before the in-service date. AEP assumes no additional compliance obligations beyond its NERC registrations, unless specifically defined in an agreement signed by AEP.

6.4 Meter Agent and Transmission Load Management (Settlements) Requirements

AEP Transmission System Load Management (Settlements) is responsible for maintaining the system of record for all AEP Transmission System loads. Transmission loads represent the amount of load on the AEP Transmission System. Load is modeled by metering all generation flowing onto the system, plus interconnection receipts from other transmission systems less deliveries to other transmission systems. AEP loads are calculated by taking the transmission system load and removing non-AEP load (also called top-down load calculation).

AEP Transmission System Load Management (Settlements) acts as the meter agent for all AEP entities and some non-AEP entities for AEP zones in the PJM and SPP markets. The main responsibility is to provide meter data to the market for financial billing. Because the calculation of the AEP top-down loads includes all points on the system, AEP Transmission System Load Management (Settlements) is required to be the meter agent in order to minimize errors or mismatched data in the markets.

AEP Transmission System Load Management (Settlements) requires the following:

- To be included in and updated on projects during the planning and setup phase in order to provide feedback and prepare for system changes
- Revenue quality metering and backup metering (when applicable) installed and compensated to the point of interconnection of AEP's transmission system
- Access to read meters or other methods to receive meter data
- To be provided with the following information:
  - The physical location of the point of interconnection to the AEP system
  - Any losses or loss factors that should be applied in the meter or translation
  - Designation of meter ownership
  - Maintenance agreements for all metering equipment, including metering instrument transformers
  - Contact information for meter data reconciliation
- Any connected Generation must have:
  - Metering to capture generation and auxiliaries accurately compensated to the point of interconnection
  - Additional metering when multiple generator entities are connected behind the same point of interconnection. Additional metering is required to capture generation and auxiliaries for each entity behind the same point of interconnection. Refer to sections 2.0 and 4.6 for more information.
  - Agreements in place to provide retail auxiliary service
  - Clear guidance on the treatment of non-generated auxiliary load (NGA) and generation for market submission and retail contracts
- A clause in all new or updated agreements for AEP Transmission System Load Management (Settlements) to be the meter agent in the PJM and SPP markets for all generation and load data on the AEP system, and to be the meter agent when AEP owns the metering on all transmission-system-to-transmission-system interconnections in those markets.

6.5 Station Load and Ancillary Service Provider

The Requester is responsible for making all appropriate arrangements for station load and ancillary service requirements, including the delivery component of transmission service, if applicable. The Requester must cause such station load and ancillary service provider arrangements or agreements to be in effect before the in-service date. If the Requester supplies their station service, the station service loads must be netted against the Requester's output. At AEP's request, the Requester must provide their current station service arrangements or agreements.

6.6 Synchronizing Facilities

The Requester is solely responsible for synchronizing its facilities with AEP in the appropriate frequency and voltage ranges and protecting its facilities from all abnormal conditions occurring on the transmission system during synchronization. The Requester must install a relay with synchronizing function to ensure that their facility is not connected to the energized power system that is out of synchronization. The Requester must own, test, and maintain equipment that synchronizes their facilities to the transmission system to meet AEP's requirements.

Upon AEP supply loss, the Requester's facilities must detect the unintentional islanding and be separated immediately from AEP. The Requester must ensure that its facility is disconnected from AEP before automatic reclosing by AEP. Otherwise, automatic reclosing out-of-phase with the Requester's generator may cause damage to the Requester's equipment. The Requester is solely responsible for their equipment protection during automatic reclosing by AEP. The Requester may also be responsible for installing additional equipment to operate in island mode and resynchronizing their islanding system to AEP.

At AEP's discretion, the Requester may be required to synchronize their facilities to the transmission system under the direction of AEP Real-time Operations.

If the Requester's facility is a part of the Blackstart requirement, there may be additional provisions.

Any future changes to the design, logic, and settings that affect the Requester's synchronization and separation functions must be submitted to AEP for review and approval.

6.7 Asynchronous Network Interconnections

Asynchronous Network Interconnections, including high-voltage direct current (HVDC) connections, are treated on a case-by-case basis and the requirements for the Requester will be outlined as part of the RTE study process. For more detailed information on the requirements and process for these connection types, contact the email addresses outlined in section 2.1. The power quality requirements are covered in section 6.13.

6.8 Voltage, Reactive Power, and Power Factor Correction

The Requester's generating equipment must not cause excessive Voltage Excursions (VE).

AEP will work with the Requester and the RTE to establish the normal operating voltage schedule, power factor schedule, and operating limits. During emergency system conditions, the Requester's generation facilities must comply with all special instructions provided by AEP Real-time Operations. Reference section 6.13 and section 3.3 for further details regarding voltage requirements.

6.8.1 Voltage Control

The Requester's generating equipment must not cause excessive Voltage Excursions (VE). The Requester must operate generating equipment in such a manner that there are no harmful impacts to system voltage levels. The Requester must provide an automatic method of disconnecting its generating equipment from the AEP facilities to protect against excessive voltage excursions. AEP will provide a reactive schedule letter or Real-time ICCP information that specifies generator voltage or power factor schedules and operation bandwidth. The Requester will install, operate, and service an automatic voltage regulator to maintain the assigned voltage schedule to the extent

possible. The reactive schedule letter will include notification requirements for steady-state deviation from the voltage or power factor schedule and changes in automatic voltage regulator status as well.

The generation facility must be capable of continuous non-interrupted operation during normal system conditions and during abnormal conditions. All reasonable measures should be taken to avoid tripping the generation facility due to high or low voltage.

The Requester's auxiliary equipment must not cause excessive voltage flicker on AEP's electric facilities during plant start-up conditions.

All three-phase generation must produce balanced 60 Hertz voltages.

6.8.2 Power Factor Control

The Requester must not place any undue burden on the AEP Transmission System with respect to reactive power and must operate their equipment in accordance with any applicable power factor requirements specified in the Requester's agreements with AEP.

6.9 Dynamic Megavolt Ampere Reactive (MVAR) Requirements

For generators, the full dynamic MVAR capability at the current MW generation amount must be available in Real-time. A dynamic reactive capability curve plotted as a function of MW output is required.

The shunt static reactive available, but not in-service, must be provided in sufficient detail to determine the amount of dynamic and static reactive reserve available. Applicability of this requirement based on generator size or size of combined generation, including DER aggregation, may be established in the near future.

6.10 Frequency Requirements

The AEP Transmission System frequency operates at a nominal 60.0 Hz with a typical daily variation of ±0.05 Hz. The operating frequency of the Requester's equipment must not deviate from this AEP system frequency. The Requester must also comply with the Frequency Response Control Modes specified by the RTE/Balancing Authority.

Under emergency conditions, the transmission system could operate outside of this range for a limited period of time. Generator underfrequency protection must be set to coordinate with the NERC-mandated automatic load shedding protection settings. The AEP underfrequency load shedding (UFLS) schemes begin dropping load between 59.50 Hz and 58.50 Hz in steps, based on the local Planning Coordinator/RTE requirements. Thus, the generator underfrequency protection must not operate before the system UFLS has a chance to respond. The Requester is responsible for setting their generator underfrequency protection to comply with both the local Area Planning Coordinator/RTE requirements for generator underfrequency protection and the latest version of NERC PRC-024 or PRC-029 standards, whichever is applicable.

6.11 Abnormal Frequency Operation

The Requester will provide the frequency-sensing equipment required to protect their facility during abnormal frequency operation. The generator's manufacturing specifications or the range specified in section 6.10 must be followed during abnormal frequency episodes.

The Requester's generator should not separate from the AEP system during under frequency conditions until all UFLS equipment on the AEP system has operated.

6.12 Underfrequency Load Shedding

The Requester, if a load serving entity such as a municipal or cooperative utility, must install under frequency relays and shed load as outlined in the applicable RTE Load Shedding Guides.

6.13 Power Quality Impacts

6.13.1 AEP Power Quality Requirements

This section, in accordance with regulatory tariff requirements and other contract operating requirements, summarizes the AEP policy on Power Quality (PQ) requirements including voltage fluctuations, harmonic distortion, and other factors for Requesters connected to the AEP transmission system.

For GC connections, all locations with Inverter Based Resources (IBR) will require reliable PQ monitoring. For EUC connections, refer to the **Industrial Load Type** section in Appendix B.2 for typical PQ POM locations requiring reliable PQ monitoring. AEP will make the final determination of PQ monitoring requirements for each location.

6.13.2 Point of Measurement

For purposes of this document, the term Point of Measurement (POM) is being used to represent the location where the PQ requirements will be met. Harmonic distortion and voltage fluctuation requirements are evaluated from the POM between the Requester and AEP's system. POM PQ monitoring and PQ data collection require using a class-A PQ meter. The dedicated PQ meter should receive a voltage input signal on each phase from resistive capacitive voltage dividers (RCVDs) and current input signal on each phase from metering class current transformers (CTs). RCVDs are only available at voltages 345kV and below. For applications greater than 345kV, contact the SIS email address referenced in Table 1.

The POM may or may not also correspond to the point of common coupling (PCC) as defined in *IEEE Std 519™-2022* and *IEEE Std 1453™-2022*, the point of interconnection (POI) in *IEEE Std 2800™-2022*, or the point of evaluation (POE) in *IEEE Std 1453™-2022*. With respect to inverter-based resource (IBR) interconnections, the POM would most similarly correspond to the point of measurement definition in *IEEE Std 2800™-2022*.

6.13.3 Voltage Fluctuation Criteria

6.13.3.0 Flicker

Flicker is the impression of fluctuating lighting luminance resulting from voltage fluctuations. The Requester individual emission levels of voltage fluctuations contribute to the flicker levels

that are monitored at the POM. The aggregate effect of the Requester individual emission levels with the existing background flicker of the system must remain within the planning levels specified in Table 2 of section 6.1.1 of IEEE Std 1453™-2022.

For Requester interconnections that are solely or include IBR, the individual emission levels of the IBR facilities must remain within the limits specified in section 8.1.3 of *IEEE Std 2800™-2022*.

6.13.3.1 Rapid Voltage Changes (RVC)

For frequent RVC events, such as those described in section 6.5 of IEEE Std 1453™-2022 and section 8.1.2.1 of *IEEE Std 2800™-2022*, RVC is monitored at the POM. The Requester aggregate effect with the existing background of the system must remain within the planning levels specified in Table 3 of section 6.5 of *IEEE Std 1453™-2022*. For Requester interconnections that are solely or include IBR, the RVC of the IBR facilities and the existing background of the system must remain within the limit specified in section 8.1.2.1 of *IEEE Std 2800™-2022.*

For infrequent RVC events, such as those described in section 6.5 of *IEEE Std 1453™-2022* and section 8.1.2.1 of *IEEE Std 2800™-2022*, the relaxed RVC characteristic limits "Minimum acceptable voltage due to infrequent event" are utilized as shown in Figure 14 section 6.5 of *IEEE Std 1453™-2022* and Figure 13 section 8.1.2.2 of *IEEE Std 2800™-2022.*

6.13.4 Harmonic Distortion Criteria

AEP requires that the Requester's operation comply with *IEEE Std 519™-2022*. For Requester interconnections that are solely or include IBR, the Requester is required to also comply with *IEEE Std 2800™-2022*.

Prior to Requester commissioning of interconnected facilities, AEP asks that the Requester provide estimated current harmonic spectrum data for the proposed facilities, if available. Voltage harmonic measurements are planned with respect to the voltage distortion limits in section 5.1 of *IEEE Std 519™-2022*. If the existing voltage harmonic levels are within these limits, the applicable current harmonic limits for the Requester facilities are determined according to the decision tree in section 5.2 of *IEEE Std 519™-2022*.

If it is determined that *IEEE Std 519™-2022* current distortion limits are applicable, the Requester current harmonic levels must remain within the limits in either section 5.3, 5.4, or 5.5 of *IEEE Std 519™-2022*, depending on the voltage at the PCC.

If it is determined that *IEEE Std 2800™-2022* current distortion limits are applicable, the Requester current harmonic levels must remain within the limits in either section 8.2.1 of *IEEE Std 2800™-2022*.

6.13.5 Electrical Interactions

If field measurements, analytical studies, or customer complaints indicate likely adverse electrical interactions (for example: resonance) between the connected facility and the AEP system, AEP and the Requester will collaborate to determine the nature and extent of the electrical interaction.

6.13.6 Compliance and Monitoring

AEP reserves the right to monitor the Requester for the electric distortions referenced in this section, or any other electrical distortions that would be relevant or complementary, at the determined POM. AEP will determine the Requester's compliance with this criterion.

AEP may permit the Requester to operate above some of the criteria stated in applicable IEEE standards until AEP receives complaints from other customers or other operating problems arise for AEP. By so agreeing, AEP does not waive any rights it may have to strictly enforce its established criteria as measured or calculated in the future.

The Requester agrees that if the operation of its facility and equipment result in voltage flicker or harmonic distortions in excess of AEP's criteria, it is the Requester's responsibility to take action to comply with such criteria. Corrective measures could include, but are not limited to, modifying production methods, materials, or installing mitigation equipment necessary to bring the Requester's operations into AEP interconnection compliance requirements.

6.14 Operational Issues

6.14.1 Emergency Operation

If the Requester's facility is part of any AEP emergency procedures (for example: Conservative Operations), AEP will provide a copy of its applicable emergency procedures, and the Requester must follow applicable procedures during a system emergency.

6.14.2 Blackstart Capability

AEP may use the Requester's generation Blackstart capability. If the Requester has Blackstart capability, this fact shall be documented in the applicable Interconnection Agreement. Factors include the Requester's generation location and other considerations applicable to system restoration in the event of a local or widespread blackout. If a battery's original equipment manufacturer has the ability to provide grid forming capability, the Requester should ensure this capability is in the design.

If a blackout occurs, the AEP Blackstart Plan must be followed to aid in system restoration. The Requester must comply with the Blackstart requirements in applicable NERC Reliability Standards. If the Requester's generation becomes completely de-energized or retired, the Requester must advise AEP and the applicable RTE of this status.

In addition to the potential Blackstart capability requirements, the Requester's generation may need the capability to operate at low output levels and participate in system frequency and/or voltage control as required.

6.14.3 Sub-Synchronous Oscillations

Depending on the generation facility's location in the transmission network, close electrical proximity to Computational Loads, series compensated transmission lines, HVDC converters, or Flexible AC Transmission Systems (FACTS) devices may result in undesirable or damaging sub-synchronous currents and/or high voltages. Also, the provision of high-speed reclosing following transmission line faults may result in excessive torsional duties. The Requester shall provide AEP with EMT models to analyze the risk of Sub-Synchronous Torsional Interaction (SSTI), Sub-Synchronous Control Interactions (SSCI), and/or Sub-Synchronous Resonance (SSR). The Requester shall provide AEP with immunity from damaging oscillations resulting from all transmission system operations and ensure the generator is not excited into resonance by normal system operations.

6.14.4 Large Load Rapid Power Variation and Forced Oscillations

Computational load facilities engaged in Artificial Intelligence (AI) machine learning or inferencing processes can produce rapid power variations that may cause forced oscillations within the interconnected power system beyond the facility's POI. Such oscillations may be either natural swing modes between synchronous generators within the interconnection or mechanical oscillations between the masses on turbine-generator rotors of individual synchronous generators. To avoid activation of electromechanical inter-generation swing modes that typically fall between 0.1-2.5 Hz within interconnected grids and to avoid damage to any nearby turbine-generator rotors resulting from excessive provocation of mechanical torsional modes in the 5-55 Hz range as well as high-cycle mechanical stresses, variation or cycling of power demand in these ranges should be avoided. High Resolution monitoring equipment will be installed at the points of interconnection to detect magnitudes of variation above 0.1 Hz, and AEP may require mitigation should the facility's operation introduce risk to power system reliability.

6.14.5 Frequency and Voltage Ride-Through Capability

The Requester's generation must have frequency and voltage ride-through capability and adhere to applicable NERC and RTE standards or criteria. Requesters must set their applicable generator protective relays such that generating units remain connected and operational during frequency and/or voltage excursion defined in NERC *PRC-024* or *PRC-029*, whichever is applicable.[2] AEP NERC will also determine the fault clearing time requirement for disturbance ride through at the point of interconnection using AEP relaying standards and document the requirement, as necessary, in the initial or amended Interconnection Agreement

6.14.5.0 Large Load Customers

Participation in Frequency Control

If a Large Load (for example: Computational Load) is to participate in a demand response or load management program, an underfrequency load shedding program, or is designated/registered as a Controllable Load Resource (CLR), the Large Load Owner/Operator shall provide their largest credible load reductions. This is for the purpose of calculations that determine the amount of frequency response required from the interconnection to mitigate generation loss/reduction events.

Voltage and Frequency Ride-Through

Large Load Customers must be capable of riding through multiple consecutive voltage excursions and frequency excursions outside of transmission system operating limits in accordance with RTE large load disturbance ride-through requirements. All exceptions must be approved by AEP's Real Time Operations organization.

[2] NERC PRC-024 - Frequency and Voltage Protection Settings for Synchronous Generators, Type 1 and Type 2 Wind Resources, and Synchronous Condensers; and PRC-029 - Frequency and Voltage Ride-through Requirements for Inverter-based Resources. Reliability Standards are subject to change. Document users should verify that they are referencing the most recent version of the Reliability Standard.

6.15 Communications and Procedures During Normal and Emergency Operating Conditions

The Requester will direct all switching, outage requests, and maintenance activities affecting the Requester-AEP interface to the appropriate AEP Real-time Operations Center (Transmission Dispatch Center), which is responsible for reviewing, scheduling, and coordinating transmission facility outages and switching. The Requester must provide AEP and the RTE (if applicable) advanced written notice of a planned outage that may affect AEP's operational reliability. The Requester must follow all applicable outage planning and coordination procedures:

- AEP Real-time Operations, *Outage Coordination Procedure*
- AEP Transmission Construction Management, *Capital Outage Planning Procedure*

On the switching date, the Requester's operator must contact AEP Real-time Operations before the switching or planned maintenance activity begins.

If the requested outage creates an abnormal condition that could affect AEP system reliability and/or customer reliability, the Requester shall mitigate all identified risks and share its restoration plan with AEP.

If a planned outage affects the protection systems resulting in a reduced or inadequate protection scenario on an inter-tie line, the Requester must follow the *AEP Failure or Disabling of Protection Systems Procedur*e for proper outage notification. In addition, the Requester must coordinate all switching of its load and backup generation with the local AEP Real-time Operations Center.

For an unplanned outage or maintenance that may affect AEP transmission operation reliability, the Requester must submit the forced outage to AEP and the RTE (if applicable) as soon as practical and provide updates whenever new information is received. Appropriate communication protocols must be followed according to the following:

- *AEP Real-time Operations Reliability Communication Protocol*
- *AEP Real-time Operations Real-time Data Integrity Guideline*
- *SCADA Station Quality Procedure*

This communications protocol does not replace any existing agreements between AEP and the Requester. If any conflicts exist between documents, the binding agreements take precedence.

6.15.1 Coordination of Scheduled Outages

The Requester must provide a schedule of all planned equipment outages to AEP and the RTE and follow the applicable outage coordination procedures. At least 30 days advance notice is required. This period may be extended depending on the RTE.

7.0 Maintenance

The following subsections outline the requirements associated with facility maintenance, including ownership, cost, maintenance, compliance, and maintenance coordination.

7.1 Ownership, Cost, Maintenance, and Compliance

The Requester will install, operate, and maintain in good order and repair, without cost to AEP, all facilities that AEP requires for the safe operation of the Requester's facilities connected to AEP. At all times, the Requester's facilities must conform to good utility practice, National Electrical Safety Code (NESC), RTE requirements, NERC Reliability Standards, National Electrical Code, and applicable laws and regulations. Any electrical facility operated as a part of the transmission grid must have the ownership, cost, maintenance, NERC, and RTE compliance responsibilities outlined in an Interconnection Agreement (IA) or Interconnection and Local Delivery Service Agreement (ILDSA).

7.2 Maintenance Coordination

Maintenance coordination requirements can be determined on an as needed basis with communication between AEP and the interconnecting parties. It is required that the Requester and AEP both accommodate maintenance outage requests to ensure the entities can conform with section 7.1. Section 6.15 provides the procedures for coordinating maintenance.

8.0 Appendix A: Definitions and Acronyms

Acronym/Term	Definition
AAR	Ambient Adjusted Ratings: A transmission line rating that: • Applies to a time period of not greater than one hour. • Reflects an up-to-date forecast of ambient air temperature across the time period to which the rating applies. • Is calculated at least each hour, if not more frequently.
AC	Alternating Current
AEP	American Electric Power Company, Inc., is a major investor-owned electric utility in the United States, composed of several operating companies, several transmission companies, and member to several joint ventures.
Affiliate Operating Companies	AEP's regulated operating companies including Ohio Power Company, AEP Texas Inc., Appalachian Power Company, Indiana Michigan Power Company, Kentucky Power Company, Kingsport Power Company, Public Service Company of Oklahoma, Southwestern Electric Power Company, and Wheeling Power Company.
AEP Station Service Power	The power consumed within the AEP-owned station to supply substation equipment.
ANSI	American National Standards Institute
APCo	Appalachian Power Company
Area Electric Power System	Electrical network of the transmission utility provider delivering/transporting electric power to load (Local EPS). See the IEEE Standard 1547™ 2003 Glossary for reference.
Auxiliary Load	A generator's auxiliary power consumption – also referred to as Auxiliary Load and is provided through the Local Electric Power System owner, otherwise called the load serving entity (LSE).
B**A**	Balancing Authority: The responsible entity that integrates resources plans ahead of time, maintains load-interchange-generation balance within a region and supports interconnection frequency in Real-time.
BCT	Bushing Current Transformer
BES	Bulk Electric System
BTMG	Behind-the-Meter Generation: Electrical generation and/or electrical power storage system, such as a solar PV system with or without battery storage, that is located behind an EUC meter.
CBEMA	Computer & Business Equipment Manufacturer's Association
CSAM	Customer Service Account Manager
Computational Load	As defined by NERC. A large electrical load whose primary purpose is running computing equipment, particularly data center, AI, and cryptocurrency-processing infrastructure, and whose size or behavior may affect Bulk Power System reliability.

Acronym/Term	Definition
CT	Current Transformer: A transformer used to monitor the current going through a piece of equipment. This device steps down the current to a lower level current suitable for a relay or meter input.
CVT	Capacitive Voltage Transformer
DC	Direct Current
DCB	Directional Comparison Blocking Protection System
DER	Distributed Energy Resource: A source of electric power that is not directly connected to the bulk power system. A DER includes both generators and energy storage facilities operating in parallel to the distribution system and is capable of exporting active power to an EPS. An interconnection system or a supplemental DER device that is necessary for compliance with IEEE Std 1547™-2018 is part of a DER.
DTT	Direct Transfer Trip
DME	Disturbance Monitoring Equipment
Effectively Grounded	X0/X1 less than or equal to 3 and R0/X1 less than or equal to 1 (IEEE definition)
E&BD	Economic & Business Development
EHV	Extra High Voltage: Transmission lines rated 765 kV, 500 kV, and 345 kV, and transformers with secondary voltages at or above 345 kV, are considered EHV facilities and are referred to as EHV facilities in this document. These facilities are part of the BES. In some cases, from a design perspective, AEP may treat some facilities as EHV while they might not meet that voltage threshold.
EMT	Electromagnetic Transient
E**PS**	Electric Power System: A network of electrical components that supply, transfer, and use electric power. ERCOT Polled Settlement—The ERCOT-required metering facilities owned by AEP typically installed to meter the interconnection between AEP and the GC Requester.
ERCOT	Electric Reliability Council of Texas: An ISO managing the flow of electric power to about 90% of the state's electric load. ERCOT performs financial settlements for the competitive wholesale bulk-power market. See RTE.
EUC	End-User Connection: A new or materially modified/qualified change connection that consumes all of the energy delivered or ultimately delivers the power to individual users. A delivery point (DP) or point of delivery (POD) is associated with this type of connection and power is expected to flow in one direction, from the AEP Transmission System to the EUC Requester. Examples of this connection type are Computational Loads industrial facilities and other load-serving entities, such as electric cooperatives and municipals. Nothing herein should be construed to imply the provision of electric service directly to any retail consumer.
Facility	A set of electrical equipment that operates as a single electric system element (e.g., a line, a generator, a shunt compensator, transformer).
FACTS	Flexible AC Transmission Systems

Acronym/Term	Definition
FERC	Federal Energy Regulatory Commission
GC	Generator Connection: A new or materially modified/qualified change (Affiliated or Non-Affiliated) connection for a generating facility, typically connected directly to the AEP Transmission System, with the intention of participating in a wholesale market.
Generator Station Service Power	A generator's auxiliary power consumption. Also referred to as Auxiliary Load and is provided through the Local Electric Power System owner, otherwise called the Load Serving Entity (LSE).
GPR	Ground Potential Rise
HV	High Voltage: Transmission lines typically rated 230 kV, 161 kV, and 138 kV, and transformers with secondary voltages above 100 kV but below 345 kV are considered High Voltage (HV) facilities and are referred to as HV facilities in this document. These facilities are part of the BES.
HVDC	High-Voltage Direct Current
HVP	High-Voltage Protection
IA	Interconnection Agreement: A legal document specifying terms and conditions for connecting AEP and Requester facilities.
I&M	Indiana Michigan Power Company
ICCP	Inter-Control Center Communications Protocol
IEEE	Institute of Electrical and Electronics Engineers
Interpersonal Communication	Any medium that allows two or more individuals to interact, consult, or exchange information.
ILDSA	Interconnection and Local Delivery Service Agreement: An agreement that includes the terms and conditions for taking wholesale electrical service from the AEP Transmission System.
IPP	Independent Power Producer: Also known as a Generation Connections (GC), an IPP is a corporation, person, agency, authority, or other legal entity or instrumentality that owns or operates facilities for the generation of electricity supply for use primarily by the public, and that is not, necessarily, an electric utility or can be. An IPP can be an owner, an operator, or both within the RTO markets based upon their registration at NERC. IPPs also take retail service from either wholesale or Affiliate entities, as IPPs must have separate station auxiliary load service, to meet their demand requirements.
ISO	Independent System Operator: Regional organizations responsible for administering the electric transmission grid. See RTE.
ITIC	Information Technology Industry Council
KPCo	Kentucky Power Company
kVA	Kilovolt Ampere
kVAR	Kilo Volt Ampere Reactive
kWh	Kilowatt-hour
Large Load Customer	As defined by the applicable regulating entity such as state, RTE, and/or FERC and specifically includes Computational Loads as defined by NERC

Acronym/Term	Definition
LEC	Local Exchange Carrier
Local Electric Power System	Local Electric Power System (EPS): • Affiliate wholesale electric distribution network/system/premises. • Non-Affiliate wholesale electric distribution network/system/premises. • Local electric power system is contained entirely with a single premises or group of premises. See the IEEE Standard 1547™-2003 Glossary for reference.
Looped Connection	A connection that is capable of receiving power from two (or more) directions.
LSA	Load Serving Entity: A local electric distribution utility, with rates and tariffs approved by the local RERRA. LSE is also the owner of the Local EPS system.
Material Modification/ Qualified Change[3]	As defined in section 2.2.
MISO	Midcontinent Independent System Operator: A regional transmission organization (RTO) that coordinates the movement of wholesale electricity in all or parts of 15 U.S. states and the Canadian province of Manitoba. See RTE.
MLSE	Most Limiting Series Element: All series elements that together make up a line section, or substation transformer circuit, are reviewed to determine which element has the most limiting rating. The most limiting element will determine the normal and emergency ratings of the facility.
MOAB	Motor Operated Air Break
MPLS	Multi-Protocol Label Switching
MW	Megawatt: One million watts
NEC	National Electric Code: Approved by the American National Standards Institute (ANSI).
NERC	North American Electric Reliability Corporation
NESC	National Electric Safety Code
NGA Load	Non-Generated Auxiliary Load
Non-Affiliate	An entity engaged in the transmission and/or distribution of electricity that is not a subsidiary of American Electric Power Company, Inc.
OATT	Open Access Transmission Tariff
OpCo	Operating Company: AEP's regional operating companies that directly serve distribution customers.
OPGW	Composite, Single-Mode, Optical Fiber Ground Wires for Overhead Use. A type of shield wire that contains a set of optical fibers for communication.

[3] NERC is currently reviewing the definition of the term "material modification." AEP will not be adjusting this definition until NERC finalizes their direction.

Acronym/Term	Definition
OTB	Option to Build: A process whereby a Requester may have the option to assume responsibility for the design, procurement, and construction of certain facilities, which upon completion are transferred to AEP per terms of an applicable agreement. Except as otherwise provided in RTO tariffs, the Option to Build shall apply only to Greenfield facilities on the AEP system. Except as otherwise provided in RTO tariffs, construction of facilities within existing AEP stations at the direction of the IPP will not be permitted. OTB documents can be found in Transmission Studies.
P&C	Protection and Control
PCE	Protection & Control Engineering
Pilot Protection Systems	A system that uses communication channels to send information from the local relay terminal to the remote relay terminal thereby allowing high-speed tripping for faults occurring within 100% of the protected line.
PJM	PJM Interconnection, LLC. A regional transmission organization (RTO) that coordinates the movement of wholesale electricity in all or parts of 13 states and the District of Columbia. See RTE.
PLC	Power Line Carrier
POC	Point of Compliance
POI	Point of Interconnection
PQ	Power Quality
PSO	Public Service Company of Oklahoma
PT	Potential Transformer: A transformer used to monitor the voltage on a piece of equipment. This device reduces voltages to a lower level that is compatible for input into a relay or meter. The IEEE industry standard terminology for this is Voltage Transformer (VT).
QSA	Quarterly Stability Assessment
Radial	A substation or load being served by a single transmission source and can include substations with downstream DER or with batteries used as a transmission asset to support the substation during emergency scenarios.
RERRA	Relevant Electric Retail Regulatory Authority: An entity that has jurisdiction over and establishes prices and policies for competition for providers of retail electric service to end customers, such as the city council for a municipal utility, the governing board of a cooperative utility, the state public utility commission or any other such entity.
RBS	Rated Breaking Strength
Requester	For this document, the entity requesting a new or materially modified/qualified change interconnection, which applies to the following: • Behind-The-Meter Generation (BTMG) • Distributed Energy Resource (DER) Connection • End-User Connection (EUC) • Generator Connection (GC) • Transmission Interconnection (TI)

Acronym/Term	Definition
Retail Customer	A Retail Customer takes either distribution or transmission electric service as an End Use Customer (EUC) from an AEP Affiliated operating company, and who has transmission or distribution project impacts; retail Customer project has a transmission planner, project manager, and a Customer Account Manager from the applicable operating company.
ROW	Right-of-Way
RTE	Regional Transmission Entity: For the purpose of this document, any regional body having jurisdiction over a party, including the applicable RTO, ISO, NERC, or a regional electric reliability organization under NERC authority.
RTO	Regional Transmission Organization: An organization that is responsible for moving electricity over large interstate areas. They coordinate, control, and monitor an electricity transmission grid. See RTE.
RTU	Remote Terminal Unit: A device used for remote monitoring and control by sending telemetry data to SCADA or other industrial control systems.
SCADA	Supervisory Control and Data Acquisition: A system that collects, processes, and communicates Real-time information back to a dispatch center, and provides remote control capability.
SIS	System Interconnections Services
SPP	Southwest Power Pool: A regional transmission organization (RTO) that coordinates the movement of wholesale electricity in all or parts of 17 states. See RTE.
Station Standards (SS) Guides	A set of AEP transmission standards that is available upon request with AEP approval.
SWEPCO	Southwestern Electric Power Company
SWPPP	Storm Water Pollution Prevention Plan
TCR	Transmission Construction Representative
Through-path	Any transmission level equipment (typically 69 kV and higher) with electrical flow through (as opposed to radial feed). Customers who own equipment on the through-path have the ability to impact system reliability. Owner/operators of through-path equipment 100 kV or greater are required to register with NERC and are subject to NERC and RTE requirements for Transmission Owners and/or Transmission Operators.
TI	Transmission Interconnection: A new or materially modified/qualified change to the AEP Transmission System from a Non-Affiliate power system, where power is expected to flow in either direction. These connections are often referred to as wires-to-wires interconnections, network interconnections, transmission-to-transmission interconnections, or interconnections. An example of a TI is connecting the AEP transmission grid to the transmission system of a neighboring utility.
TIIR	Technical Interconnection and Interoperability Requirements
TLES	Transmission Line Engineering Standards: A set of AEP transmission standards that is available upon request with AEP approval.

Acronym/Term	Definition
Transmission Companies	AEP's electric utilities in the transmission-only business including AEP Appalachian Transmission Company, Inc., AEP Indiana Michigan Transmission Company, Inc., AEP Kentucky Transmission Company, Inc., AEP Ohio Transmission Company, Inc., AEP Oklahoma Transmission Company, Inc., AEP Southwestern Transmission Company, Inc., and AEP West Virginia Transmission Company, Inc.
UFLS	Underfrequency Load Shedding
VAC	Volts Alternating Current
VDC	Volts Direct Current
VE	Voltage Excursion: a temporary deviation of a voltage level from its normal or expected value.
VT	Voltage Transformer
Wholesale Customer	Wholesale customers include Non-Affiliated municipalities, cooperatives, or other utilities that purchase and/or sell energy for resale and are connected to AEP as a demand End-User Connection (EUC) or Transmission Owner TO) connection. These customers have separate RERRAs, are registered in each RTE accordingly, and pay the applicable AEP Transmission revenue requirement based on their load share or under the RTE tariffs. Each Non-Affiliate Wholesale Customer connected to AEP must execute a transmission interconnection service agreement or an interconnection and local delivery service agreement (ILDSA). Pursuant to these agreements, the wholesale entity pays facility charges plus any site-specific metering charges and, if applicable, local distribution and/or operation costs, pursuant to their ILDSA or its equivalent agreement. ILDSAs are not used in ERCOT Texas.

9.0 Appendix B: Requester Information Requirements

This Appendix consists of the following forms:

- Appendix B.1: GC and DER Information Requirements Form
- Appendix B.2: EUC Information Requirements Form
- Appendix B.3: TI Information Requirements Form

Distributed Energy Resources (DERs)/Behind-The-Meter Generation/Generation Connections (GC)

Generator Request Form Checklist

Section	Information Item	Feasibility Study	Impact Study	Facilities Study	Combined Study
A	**Contact Information**				
A.1	Requester Name	DER OH & GC	DER OH & GC	DER OH & GC	DER Non-OH
A.2	Requester Title	DER OH & GC	DER OH & GC	DER OH & GC	DER Non-OH
A.3	Requester Address	DER OH & GC	DER OH & GC	DER OH & GC	DER Non-OH
A.4	Requester Phone	DER OH & GC	DER OH & GC	DER OH & GC	DER Non-OH
A.5	Requester Email	DER OH & GC	DER OH & GC	DER OH & GC	DER Non-OH
A.6	Technical Lead Name	DER OH & GC	DER OH & GC	DER OH & GC	DER Non-OH
A.7	Technical Lead Title	DER OH & GC	DER OH & GC	DER OH & GC	DER Non-OH
A.8	Technical Lead Phone	DER OH & GC	DER OH & GC	DER OH & GC	DER Non-OH
A.9	Technical Lead Email	DER OH & GC	DER OH & GC	DER OH & GC	DER Non-OH
B	**Project Schedule**				
B.1	Requested Generation Connection In-Service Date	DER OH & GC	DER OH & GC	DER OH & GC	DER Non-OH
C	**Project Scope**				
C.1	Detailed Request Description	DER OH & GC	DER OH & GC	DER OH & GC	DER Non-OH
C.2	AEP Asset that Customer's Facility Will Be Connected to	DER OH & GC	DER OH & GC	DER OH & GC	DER Non-OH
C.3	Electric Distribution Company	DER OH & GC	DER OH & GC	DER OH & GC	DER Non-OH
C.4	GPS Coordinates for the Point of Interconnection (POI)	DER OH & GC	DER OH & GC	DER OH & GC	DER Non-OH
C.5	Requested Voltage Class	DER OH & GC	DER OH & GC	DER OH & GC	DER Non-OH
C.6	RTO Queue Number (if applicable)	DER OH & GC	DER OH & GC	DER OH & GC	DER Non-OH
D	**Modeling Information**				
D.1	Characteristics of the Generator	DER OH & GC	DER OH & GC	DER OH & GC	DER Non-OH
D.2	Unit Capability Data	DER OH & GC	DER OH & GC	DER OH & GC	DER Non-OH
D.3	Unit Generator Dynamics Data		DER OH & GC	DER OH & GC	DER Non-OH
D.4	Main Power Transformer Data	DER OH & GC	DER OH & GC	DER OH & GC	DER Non-OH
E	**Detailed Documentation**				
E.1	Active Anti-Islanding Protection		DER OH & GC	DER OH & GC	DER Non-OH
F	**Drawings, Diagrams, and Maps**				
F.1	Site Plan	DER OH & GC	DER OH & GC	DER OH & GC	DER Non-OH
F.2	One-Line Drawing of Facility	DER OH & GC	DER OH & GC	DER OH & GC	DER Non-OH
F.3	Three-Line Drawing of Generation System			DER OH & GC	DER Non-OH
F.4	Elementary Drawings			DER OH & GC	DER Non-OH

Distributed Energy Resources (DERs)/Behind-The-Meter Generation/Generation Connections (GC)

Generator Request Form

Go through the Checklist above to determine what information is required to be submitted to the respective AEP mailbox.

Contact Information (Requester)

Date	
Customer Name	
Customer Address	
Name	
Job Title	
Phone	
Email	

Attachments	Included	Future	N/A
Site Plan[iv]			
One-Line Drawing of Facility[v]			
Three-Line Drawing of Gen. System[vi]			
Elementary Drawings[vii]			
System Modeling Data[viii]			
Project Schedule			

Request Information

Requested Generation Connection In-Service Date

Date Electric Distribution Company[ix]

County Name

Proposed Location (with GPS Coordinates) for POI

Request Description

Contact Information (Technical Lead)

Name	
Job Title	
Phone	
Email	

Questions Based on Request

Are customers' facilities currently connected to the AEP system?[i]

Type of Energy Source[ii]

Type of Generator (Synchronous, Induction, Inverter, and so on.)[iii]

Is this a modification of an existing Generation facility?

Voltage Class (kV)

Connected to Which AEP Asset?

RTO Queue Number (if applicable)

If so, which facility?

The Generating Equipment is intended to be used for:
(Emergency/Standby, Peak Shaving, Wholesale Market Participation, Self-Supply, etc.)

Unit Capability Data[x]

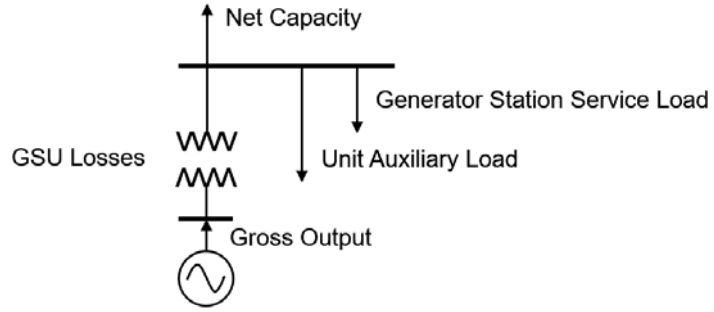

Net Capacity = (Gross Output – GSU Losses – Unit Auxiliary Load – Generator Station Service Load

Season	**Max/Min**	**Data Point**	**Data**
Summer 92°F ambient air temperature	**Max**	Net Capacity (MW)	
		Unit Auxiliary Load (MW/MVAR)	
		GSU Losses (MW)	
		Gross Output (MW)	
	Min	Net Capacity (MW)	
		Unit Auxiliary Load (MW/MVAR)	
		GSU Losses (MW)	
		Gross Output (MW)	
Winter 30°F ambient air temperature	**Max**	Net Capacity (MW)	
		Unit Auxiliary Load (MW/MVAR)	
		GSU Losses (MW)	
		Gross Output (MW)	
	Min	Net Capacity (MW)	
		Unit Auxiliary Load (MW/MVAR)	
		GSU Losses (MW)	
		Gross Output (MW)	
		Generator Station Service Load (MW/MVAR)	

	Estimated Annual Energy Production (MWh)	
	Gross Reactive Power Capability at Max Gross Output (Leading & Lagging)	

Unit Generator Dynamics Data[xi]

MVA Base	
Nominal Power Factor	
Terminal Voltage (kV)	

Modeling for Synchronous Machine:

Unsaturated Reactances (provide values in percent or per-unit, on MVA Base)

Direct Axis Synchronous Reactance, $X_{d(i)}$	
Direct Axis Transient Reactance, $X'_{d(i)}$	
Direct Axis Sub-transient Reactance, $X''_{d(i)}$	
Quadrature Axis Synchronous Reactance, $X_{q(i)}$	
Quadrature Axis Transient Reactance, $X'_{q(i)}$	
Quadrature Axis Sub-transient Reactance, $X''_{q(i)}$	
Stator Leakage Reactance, X_l	
Negative Sequence Reactance, X_2	
Zero Sequence Reactance, X_0	
Saturated Sub-transient Reactance, $X''_{d(v)}$	
Armature Resistance, R_a	

Time Constants (provide values in seconds)

Direct Axis Transient Open Circuit, T'_{d0}	
Direct Axis Sub-transient Open Circuit, T''_{d0}	
Quadrature Axis Transient Open Circuit, T'_{q0}	
Quadrature Axis Sub-transient Open Circuit, T''_{q0}	

Additional Data (provide values as stated)

Inertia, H (kW-sec/kVA, on KVA Base)	
Inertia, H (per-unit, on MVA Base)	
Speed Damping, D (per-unit, on MVA Base)	
Saturation Values at Per-Unit Voltage [S(1.0), S(1.2)]	

IEEE Dynamic Model Parameters

For each applicable model, list the PSSE library model used and provide documentation of parameter values for each model that are specific to the Unit.

Turbine Governor Model[xii]	
Exciter Model[xii]	
Power System Stabilizer Model[xii]	
Compensator Model[xii]	
Turbine Load Controller Model[xii]	

Modeling for Inverter-Based Resource:

IEEE Dynamic Model Parameters

For each applicable model, list the PSSE library model used and provide documentation of parameter values for each model that are specific to the Unit.

Generator Model[xii]	
Electrical Control Model[xii]	
Mechanical Drive Train Model[xii]	
Pitch Control Model[xii]	
Aerodynamic Model[xii]	
Plant Controller (Auxiliary Control) Model[xii]	
Torque Control Model[xii]	

Modeling for Unit Protection:

IEEE Dynamic Model Parameters

For each applicable model, list the PSSE library model used and provide documentation of parameter values for each model that are specific to the Unit. If multiple instances for any of the following models exist, please provide information for each model instance.

Under-/Over-Frequency Generator Bus Disconnection Relay	FRQTPAT
FL, Lower Frequency Threshold (Hz)	
FU, Upper Frequency Threshold (Hz)	
TP, Relay pickup time (sec.)	
TB, Breaker time (sec.)	

Under-/Over-Frequency Generator Trip Relay	FRQDCAT
FL, Lower Frequency Threshold (Hz)	
FU, Upper Frequency Threshold (Hz)	
TP, Relay pickup time (sec.)	
TB, Breaker time (sec.)	

Under-/Over-Voltage Generator Bus Disconnection Relay	VTGTPAT
VL, Lower voltage Threshold (pu)	
VU, Upper voltage Threshold (pu)	
TP, Relay pickup time (sec.)	
TB, Breaker time (sec.)	

Under-/Over-Voltage Generator Trip Relay	VTGDCAT
VL, Lower voltage Threshold (pu)	
VU, Upper voltage Threshold (pu)	
TP, Relay pickup time (sec.)	
TB, Breaker time (sec.)	

Modeling for Short-Circuit Studies:

If verified user-defined models, representing the planned generator facilities, equipment, and controls, can be provided in ASPEN v15 format to AEP, this will save time in the study verification/delivery process. Otherwise, other formats require AEP to re-build the short-circuit analysis on a one-one unit basis, adding time to the process.

Modeling for Electromagnetic Transient (EMT) Studies:

If a verified user-defined EMT model representing the planned generator facilities, equipment, and controls is available and in PSCAD format, please provide this modeling to AEP.

Main Power Transformer Data[xiii]

Data Points	Data
# of Transformers	
Transformer MVA Base	
# of Transformer Windings	
Transformer Winding Impedance (R+jX, on transformer MVA Base) – High to Low	
Transformer Winding Impedance – High to Tertiary	
Transformer Winding Impedance – Low to Tertiary	
Transformer Rating (MVA)	
Transformer Low-side Voltage (kV)	
Transformer High-side Voltage (kV)	
Transformer Tertiary Voltage (kV)	
Transformer Winding Connection Types (High-Low-Tertiary)	
Transformer Off-nominal Turns Ratio	
Transformer Number of Taps and Step Size	
Transformer X/R Ratio	

Anti-Islanding Protection Documentation

If it is planned that the generator will have active anti-islanding protection during commercial operation, the requestor must provide technical documentation describing the protection system that will be used and how it will function.

Endnotes

[i] If yes, provide one-line diagram of existing connection arrangement with existing meter locations identified. Identify meter type (e.g., kWH revenue).

[ii] List what type of energy source/primary fuel type the generator is for this request: Solar, Wind, Storage, Hydro, Diesel, Natural Gas, Fuel Oil, Nuclear, Other (please specify).

[iii] Specify the type of technology used for the type of generator (inverter-based resource, steam turbine, combustion turbine, combined/simple cycle, etc.)

[iv] Plot plan or description showing the exact location and orientation of proposed facilities and point of electric service delivery. Note: AEP has specific guidelines for site selection and must approve the interconnection substation location and design – refer to Section 3.5.

[v] One-line diagrams shall include:

1. Equipment names and/or numerical designations for all circuit breakers, switches, transformers, generators, etc., associated with thegeneration.
2. Power Transformers – name or designation, nominal kVA, nominal primary, secondary, tertiary voltages, vector diagram showing winding connections, tap settings, and transformer impedance. A copy of the transformer nameplate and test report that includes both positive and zero sequence impedance information will ultimately be required.
3. Station Service Transformers – Designate phase(s) connected and estimated kVA load.
4. Instrument Transformers – Voltage and current, phase connections.
5. Surge Arresters/Gas Tubes/Metal Oxide Varistors/Avalanche Diode/Spill Gaps/ Surge Capacitors, etc. – Type and Ratings.
6. Capacitor Banks – kVAR rating.
7. Disconnect Switches – Indicate status normally open with a (N.O.) and whether manual or motor operated. Include switch voltage, continuous and interrupting ratings.
8. Circuit Breakers – Interrupting rating, continuous rating, operating times.
9. Generator(s) – Include nameplate, test report, type, connection, kVA, voltage, current, rpm, PF, impedances, time constraints, etc.
10. Point of Interconnection to power delivery system and phase identification.
11. Fuses – Manufacturer, type, size, speed, and location.
12. For installations larger than 50KW, the One-Line should be signed and stamped by an applicable state licensed Professional Engineer where the project is located.

[vi] Three-line diagrams shall include, same as ii.

[vii] Provide potential and current drawings associated with the protection and control schemes for the generator and interconnection equipment. The drawings should include:

1. Terminal designation of all devices – relay coils and contacts, switches, transducers, etc.
2. Relay functional designation – per latest ANSI standard. The same functional designation shall be used.
3. Complete relay type (such as CV-2, SEL321-1, REL-301, IJS51A, etc.).
4. Switch contact shall be referenced to the switch development if development is shown on separate drawing.
5. Switch developments and escutcheons shall be shown on the drawing where the majority of contacts are used. Where contacts of a switch are used on a separate drawing, that drawing should be referenced adjacent to the contacts in the switch development. Any contacts not used should be referenced as spare.
6. All switch contacts are to be shown open with each labeled to indicate the positions in which the contract will be closed. Explanatory notes defining switch coordination and adjustment where mid-adjustment could result in equipment failure or safety hazard.
7. Auxiliary relay contacts shall be referenced to the coil location drawing if coil is shown on a separate drawing. All contacts of auxiliary relays should be shown and the appropriate drawing referenced adjacent to the respective contacts.

8. Device auxiliary switches (circuit breakers, contactor, etc.) should be referenced to the drawing where they are used.
9. Any interlocks (electromechanical, key, etc.) associated with the generation or interconnection substation.
10. Ranges of all timers and setting if dictated by control logic.
11. All target ratings; on dual ratings note the appropriate target tap setting.
12. Complete internal for electromechanical protective relays. Microprocessor type relays may be shown as a "black box," but manufacturer's instruction book number shall be referenced and terminal connections shown.
13. Isolation points (state links, PK-2 and FT-1 blocks, etc.) including terminal identification.
14. All circuit elements and components, with device designation, rating and setting where applicable. Coil voltage is shown only if different from nominal control voltage.
15. Size, type, rating, and designation of all fuses.
16. Phase sequence designation as ABC or CBA.
17. Potential transformers – nameplate ratio, polarity marks, rating, primary and secondary connections (see Requirements for minimum ratings). Current transformers (including aux. CT's) – polarity marks, rating, tap ratio and connection.

[viii] Modeling data for onsite generation is supplied to AEP to allow for system studies to be performed. It is recognized that some of this data may initially be preliminary in nature. It is the Requester's responsibility to make AEP aware of changes to this data, as soon as it is available, throughout the development process. Requester must provide final certified test reports and as-built modeling data (including validated dynamic modeling) to AEP prior to commissioning and commercial operation.

[ix] Locate your EDC on your respective Public Utilities Commission (PUC) website for electric service area based on location.

[x] Provide all information regarding the expected unit capability. Make sure you submit the Reactive Capability Curve.

[xi] Provide all generator dynamics data about the unit. Make sure you submit the generator certified test report information.

[xii] Dynamic models should be selected from the NERC Acceptable Models List (list can be found on the NERC Model Assessment site).

[xiii] Provide all transformer data about the unit. Make sure you submit the transformer test report information. Note: GSU/Collector step up transformer manufacturer's certified test report must include positive- and zero-sequence impedances between all windings (including tertiary). Also, indicate whether the transformer is shared with other units.

End-User Connection (EUC)

New or Material Modification/Qualified Change Request Form (as defined in Section 2.1. & 2.2)

Upon completion of the form and inclusion of all required details, please email the form to the inbox for the RTO in which you are located, as outlined in Section 2.1

Contact Information

Date (MM/DD/YYYY)	
Customer Name	
Customer Address	
Requester Name	
Requester Job Title	
Requester Phone	
Requester Email	

Attachments	**Included**	**Future**	**N/A**
Site Plan[i]			
One-Line Drawing of Facility[ii]			

Is this a new or materially modified delivery point?
If load is being transferred from another location, from where?
If load is being transferred, is the existing delivery point being materially modified (If so, provide details).

Questions

Do you have an existing contract with AEP?
If yes, who is your AEP Customer Account Manager?
What is your Service Contract # (if applicable)?
What type of load are you connecting?

Request Information
Which RTO serves the local distribution utility load?
What is the target In-Service Date (ISD)?
Which AEP Operating Company (OpCo) is this delivery point located within?

What are the GPS coordinates of the delivery point?
What is the voltage class (kV) of the asset in which you are requesting to connect?
To which AEP asset are you requesting connection?
Please describe your request in further detail:

Industrial Load Type (select from list and please describe specific load type below, including any new technologies and large equipment)

Agricultural - Irrigation & Pumping	☐	Lumber Mill	☐	Petro-Chemical Plant	☐
Aluminum Smelter	☐	Manufacturing General - specify type/use below	☐	Renewables	☐
Car Manufacturing	☐	Mining	☐	Power Plant Auxiliary	☐
Crypto/Blockchain	☐	Oil Pumping	☐	Semiconductor Plant	☐
Data Center AI Training/Inference: specify type/use below (for example: multi-tenant / colocation, enterprise, hyperscale, and so on.)	☐	Paper Mill - Kraft Process	☐	Shale Gas Extraction	☐
Data Center - non-AI Training: specify type/use below (for example: multi-tenant / colocation, enterprise, hyperscale, and so on.)	☐	Greenhouse	☐	Steel Mill	☐
Defense	☐	Industrial Park	☐	Transportation – Rail	☐
EV Industry	☐	Pipeline	☐	Hydrogen Electrolyzers	☐
Food Processing	☐	Paper Mill - Thermal-Mech	☐	Other	☐
Liquified Natural Gas	☐				

Description:	

In addition to the following forms, Server Farm/Data Center customers should complete and submit to AEP the NERC Data Center Information Collection Questionnaire. Contact SPA@aep.com for the latest version of the form. All Data Center customers should review the requirements in Section 6.13 Power Quality Impacts for compliance.

Onsite Generation (Behind-the-Meter) If onsite generation is present or anticipated, please complete the generation connection form in Appendix B.1.

Onsite Generator Description	Gen Size (kVA)	Duration of Continuous Operation (Hrs.)	Gen Low Voltage Threshold (pu), if applicable

If BESS is present, please provide the following:

Onsite BESS Description	Connected to AC or DC	BESS Size (kVA)	Duration of Continuous Operation (Hrs.)	Expected Charge Rate	Maximum Charge Rate

Load Ramp Schedule

Load Ramp Schedule Step [ii]	Description of Step	Normal Demand (MW)	Anticipated Peak Demand (MW)	Anticipated Power Factor (%)	Anticipated Load Factor (%)
Ultimate					

Is Load Seasonal or Flat?

Uninterruptible Power Supply Information

If applicable, please identify each major UPS system by providing a description of what power electronic and/or motor loads the UPS is protecting.

UPS Device Application	UPS Size (kVA)	UPS Duration (Hrs)	UPS Low Voltage Turn-On Threshold (pu, at customer load terminal bus)

Power Electronic Load Information

If applicable, please identify each major type of power electronic load demand that is present and include any protection device settings protecting that load.

Power Electronic Application	Demand (kW)	Terminal Voltage (Volts)	Protection Type (contactor and/or relay)	Load Protection and Switch-over settings		Reconnection settings		
				Dropout Voltage (pu)	Delay (cycles) (enter 0 for instantaneous)	Type (Automatic or Manual)	Reconnect Voltage (pu)	Delay (cycles) (enter 0 for instantaneous)

Motor Load Information

If applicable, please identify each major type of motor load demand that is present and include any protection device settings for that load. See below for examples of motor applications, motor connections, and motor types:

Examples of Motor Types, Connections, and Applications		
Motor Application	**Motor Connection**	**Motor Type**
HVAC compressor	Direct online	dc motor
Compressor (centrifugal)	Soft-start	Synchronous motor
Compressor (other)	ASD/VFD connected (ac)	1-phase induction motor
Centrifugal Pump	ASD/VFD connected (dc)	3-phase induction NEMA A
Displacement Pump		3-phase induction NEMA B

Fan		3-phase induction NEMA C
Conveyor		3-phase induction NEMA D
Crusher		Electronically commutated
Hoist		

Motor Application	Motor Connection	Motor Type	Size (kW)	Terminal Voltage (Volts)	Inertia (kgm^2)	Protection Type (contactor and/or relay)	Load Protection and Switch-over settings		Reconnection settings		
							Dropout Voltage (pu)	Delay (cycles) (enter 0 for instantaneous)	Type (Automatic or Manual)	Reconnect Voltage (pu)	Delay (cycles) (enter 0 for instantaneous)

Delivery Point Descriptions[iv]

a) Please explain the planned high-side protection device(s) and relaying scheme, including manufacturer, type, voltage rating, and current rating of each device:

b) If utilizing fuse protection on the transformer(s), please provide the details of that device[v]:

c) Please explain the power transformer(s) connection type[vi] and details of the unit(s):

d) Please explain the planned low-side protection device(s) and scheme, including all data on fuses, breakers, relays, and relay settings:

e) Please explain, if applicable, the size and the amount of fixed or switched capacitors or other power factor correction equipment and methods that will be utilized for operation:

f) Please explain the maximum magnitudes (MW & MVAR) of sudden load swings at the point of common coupling and the number of fluctuations per second, minute, or hour:

g) Please explain the maximum expected demand (MW & MVAR) at the point of interconnection on a seasonal basis including forecasted values of the buildout schedule (if different than indicated in the load ramp schedule):

h) Please provide data on the harmonic and sub-harmonic current/voltage spectra of the equipment to be installed under three- phase balanced and unbalanced conditions:

i) Please provide, if applicable, data on SVC (other FACTS or similar devices) and harmonic filters:

j) Please explain if this request is for the connection of a distribution system with high fault currents:

k) Please explain any special needs or requests:

l) Please explain expected maximum ramp rate (MW/min) in down-ramp and up-ramp:

m) Please explain expected pulsating load levels (e.g., Intra-Minute Fluctuation, MW/~5s), such as the MW & MVar fluctuations during AI/ML training, if applicable:

Endnotes

[i] Plot plan or description showing the exact location and orientation of proposed facilities and point of electric service delivery.

[ii] Including high-side protection device(s), transformer, low-side protection device(s), and electrical configuration of the connection to the facility.

[iii] Include all steps of the anticipated load ramp, as necessary. Include, at a minimum, the first 5 years following in-service. Please include normal and peak demand in each perspective year.

[iv] Provide detailed descriptions of connection to AEP Transmission system.

[v] AEP has specific requirements on when fuse style protection can be utilized, please refer to Section 3.1.1 of the Connection Requirements for details

[vi] AEP has specific requirements for the type of transformer connections allowed, please refer to Sections 3.1.1 and 4.4.1 of the Connection Requirements for details. Details needed of the unit(s) include manufacturer's nameplate, serial number, available voltage taps, MVA ratings, high and low winding connections, low-side grounding (if used), and impedance test report data that includes percent impedance for both positive and zero sequence (primary-secondary1, primary- secondary2, secondary1-secondary2).

Transmission Interconnection (TI)

New or Material Modification/Qualified Change Request Form

Upon completion of the form and inclusior of all required details, please email to the inbox depending on the RTO in which you are located, as outlined in section 2.1.

Contact Information

Date (MM/DD/YYYY)	
Customer Name	
Customer Address	
Requester Name	
Requester Job Title	
Requester Phone	
Requester Email	

Comment(s)/Description

Request Description

Additional Comment(s)

[1]Plot plan or description showing the exact location and orientation of proposed facilities and point of interconnection.

[2]Including protection device(s) and electrical configuration of the connection.

Attachments	Included	Future	N/A
Site Plan[1]	☐	☐	☐
One-Line Drawing of Facility[2]	☐	☐	☐

Request Information

Is this a New or Modified Point of Interconnection?

Which RTO has studied and approved this request?

Requested in-Service Date

GPS Coordinates of Requested Interconnection

Voltage Class (kV)

To which AEP asset will the interconnection be connected?

What is the Service Contract # (if applicable) being modified?

Which RTO are you registered within: (PJM, SPP, ERCOT, Other)

How are you registered with the above RTO? Pick all that apply: (Load Service Entity, Transmission Owner, Transmission Operator)